ENZFELDER

MOTION FOR SUCCESS

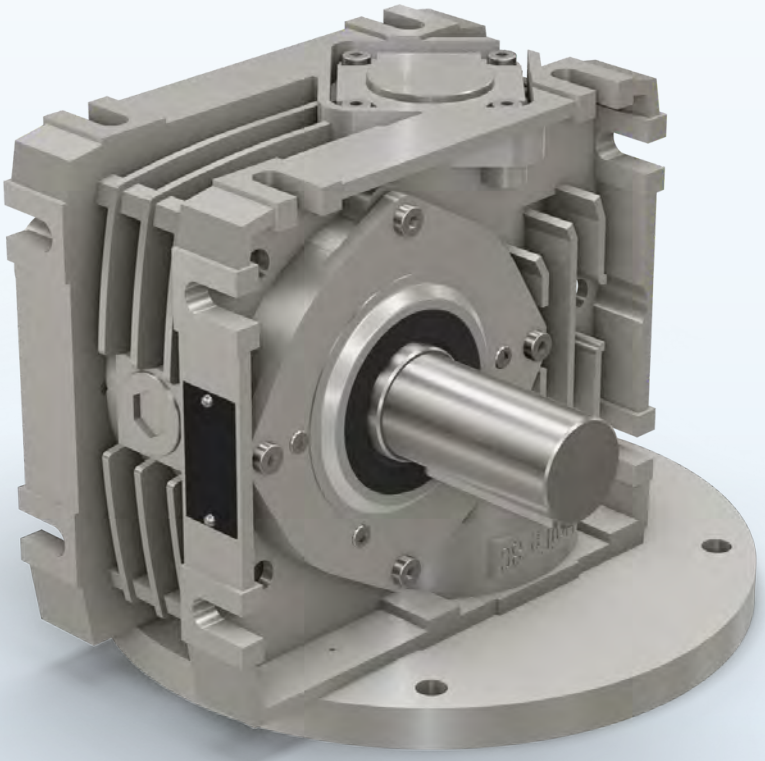

uniCe®

worm gear

ENZFELDER

MOTION FOR SUCCESS

WHO WE ARE

For more than 50 years, we have been planning and developing innovative and customized drive and lifting technologies at our own production site, which are tailored to the individual needs of our customers. Our experience with external influences and conditions such as extreme cold, heat, pressure, acid, vibration, etc. sets us apart, especially in complex projects. We are constantly in close contact with our customers, not only during technical clearance, but also after delivery of our products. In the end, it is not only the successfully implemented projects that counts for us. We offer the best possible support to our customers. To ensure the proper use of the products, we are also there for you after commissioning for any maintenance and spare parts deliveries.

FACTS

- Owner managed since 1969
- Development & production in Austria
- Produces approx. 20.000 gearboxes per year
- Moving loads from 10 kg to 500 t
- 47 % of the delivered products are individual solutions
- Error rate of delivered products under 0.25 %
- Over 30 years availability of spare parts
- 70 % of our customers trust in us for more than 15 years
- Represented with projects all over the world
- Export quota approx. 90 %, especially to Europe, Asia, North America...
- Most employee work for over 15 years with us

SOCIAL MEDIA

CONTACT US

Tel: +43-2256-81287-0
Mail: office@enzfelder.at

PRODUCTS

SCAN ME

Table of contents

Introduction

The selection of innovative gears is influenced by crucial factors such as variety, quality, price, and delivery capacity.

We strive to achieve the optimal combination of these factors to provide the best solution for every industrial sector and application.

Gears of Enzfelder GmbH are used all over the world.

Whether in the food, automotive, material, or metalworking industry, we always have a solution for your drive needs.

If you cannot find what you're looking for in our catalog, please feel free to request a consultation.

We are continuously working on the further development of our products.

Not all specifications in this catalog are strictly mandatory.

Change of measurements are reserved.

Advantages

Why should you choose a uniCe gear?

- Approved application since 1967 with quality from Austria!
- uniCe worm gear units can be fixed on each side as the housing is strictly prismatic and shows accordingly holes or slots.
- uniCe worm gear units can be fixed in any required position. After positioning the upper oilscrew is changed against a breather – if a breather is necessary.
- High overloads are permissible due to the use of special gear teeth. At least 100% more load can be sustained before the possibility of tooth breakage.
- The robust housing is either made of a single piece (size 035, 040, 050, 063) or, if constructed in sections, designed such that the sealing surfaces are cylindrical and do not transmit torque because of additional waxing of the surface.
- The hollow output shaft enables direct assembly on driven machines without the need for a coupling, saving space in applications where compactness is desired.
- Exceptionally high overload capacity due to bearings larger than the worm gear.

- Built in slip coupling:
  (torque limiter) allows a determined safety factor for all the parts before and after the gear unit. The desired torque cannot be exceeded.
  Further advantages: Protection against shock loads, operating faults and overloads. Also available with double end shafts and hollow shafts.

- Assembly of IEC-flanged motors with B5-flange (with through holes), in most cases also B14 type (with tapped holes), NEMA-flanges, air- or hydraulic-motors is possible. An oilseal in the Motorflange is not necessary.
  Changing the motor for another frequency or voltage is as easy as replacing a motor coused by electric damage.

- Housing crafted from heat-hardened aluminum, exhibiting higher rigidity compared to cast-iron.

- Aluminum provides three times better heat conductivity and exhibits the same heat expansion as the bronze rim, ensuring consistent mating conditions for the worm and wheel from cold to warm gear, in contrast to a cast-iron housing which has only half of this effect.

- An integrated fan, starting from size 063 or larger as needed, enables significantly enhanced heat removal. Cool air is directed along the fins, strategically designed to cover the entire area. Further details are available upon request.

Application

You can find worm gears in the most different applications:

- Conveyor Plant (belt conveyor)
- Food Industry
- Custom Machinery Manufacturing
- Aerotechnics
- Automation
- Automotive Industry
- Pharmaceutical Industry and much more

Type designation

Example for the designation of a worm gear:

uniCe-035-N-6-W-QH-FI-QC

1 – 2 - 3 – 4 – 5 – 6 – 7 – 8

1. uniCe = normal worm gear
   uniTeCe = pre-stage worm gear

2. distance between axles [mm] (size)
   035, 040, 050, 063, 080, 100

3. N = normal version
   R = version with built in slip coupling

4. reduction
   6, 8, 10, 12, 16, 20, 25, 30, 36, 40, 50, 63, 80
   attention at pre-stage gear (uniTeCe)
   pre-stage reduction size dependency = 6,25 / 10 / 12,5
   gear reduction x pre-stage reduction = total reduction
   z.B.: 20 x 6,25 = 125

5. driving side

   5.1 axle drive shaft
   W = drive shaft

5.2 motor flange and hollow shaft
z.B.: JM / 140 / 24

JM = driving side motor flange for motor according to IEC-norm

140 = flange diameter [mm] dependent to size
uniCe 035: ø090, ø105, ø120, ø140, ø160
uniCe 040: ø090, ø105, ø120, ø140, ø160, ø200
uniCe 050: ø120, ø140, ø160, ø200
uniCe 063: ø140, ø160, ø200, ø250
uniCe 080: ø160, ø200, ø250, ø300
uniCe 100: ø200, ø250, ø300, ø350

24 = hole diameter of worm [mm] dependent to size
(drilled and grooved)
uniCe 035: ø09, ø11, ø14
uniCe 040: ø09, ø11, ø14, ø19
uniCe 050: ø11, ø14, ø19, ø24
uniCe 063: ø14, ø19, ø24, ø28
uniCe 080: ø19, ø24, ø28, ø38
uniCe 100: ø24, ø28, ø38, ø42, ø48

5.3 engine mounting
z.B.: ATDC 63 A 2 B 14 KK1 PTO 2W
ATDC = motor with brake
63 = size
A = power class
2 = number of poles standard 2 poles or 4 poles
B14 = flange according IEC see page 8
KK1 = terminal box position (see page 6)
PTO = bimetallic device PTO (optional)
or PTC
2W = second driving shaft (optional)

Please choose size, power class and number of poles out of table on page 35

6. output side
QH = driven hollow shaft
QAB = driven shaft on both sides
QA = driven shaft on side QA (=right)
QB = driven shaft on side QB (=left)

7. Fl = flange on output side
only on side QB

8. QC = second driving shaft

Mounting position

Universal mounting:

The gears can be fixed on each housing side.

The housing has holes and sluts which are not only used for mounting, also to assemble covers, arm, end switch, torque reaction bar and much more.

Attention at size 080 and 100, after mounting the upper oilscrew is changed against a breather!

Terminal box position

Kindly specify the position of the terminal box in your order.

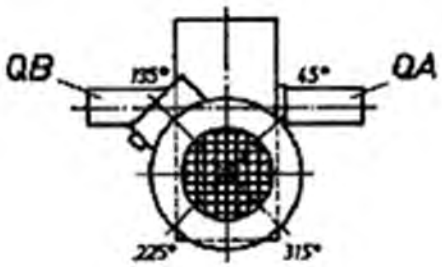

uniCe 035, 040, 050 und 063

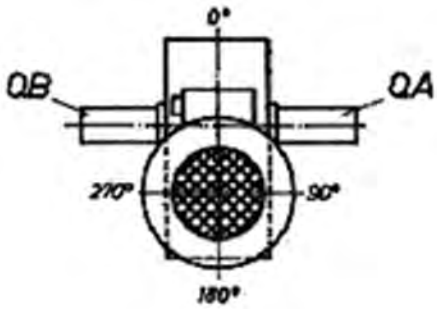

uniCe 080 und 100

The position depends on size.

0° / 45° = KK1

90° / 135° = KK2

180° / 225° = KK3

270° / 315° = KK4

Selection of size

Power ratings are based upon 20.000 hours of continuous, uniform running.

(i.e. 10 years of 2000 hours).

Thermal limits of power ratings are based upon an ambient temperature of 76°F (20°C), synthetic lubricants and a maximum temperature of 195°F (90°C).

During the first 10 hours 212°F (100°C) is permitted.

Adjustments to other conditions are to be made based on the service factors indicated below.

$T_{2TAB} \geq T_2 * b_1 * b_2 * b_3 * b_4$

$P_{1TAB} \geq \frac{P_2}{\eta} * b_1 * b_2 * b_3 * b_4 (P_2 = \frac{T_2 * n_2}{9550})$

Attention! Please check after selection:

If $T_{2max} \geq T_2$ and

If $\frac{P_{MOT} * \eta * 9550}{n_2} \leq T_{2max}$

T_{2TAB} = allowed torque acc. table [Nm]
T_2 = required torque for driven machine [Nm]
T_{2max} = allowed max. torque of choosen gear [Nm]
P_{1Tab} = allowed input power acc. table [kW]
P_2 = power required to drive the machine [kW]
= output power of the gear
P_{MOT} = motor power [kW]
η = efficiency of the gear
n_2 = positive output speed of the gear

b_1

Class of Load	Life time of gear			
	4000 h	12000 h	20000 h	30000 h
uniform T2 + 10%	0,7	0,9	1,0	1,2
moderate shocks T2 + 25%	0,8	1,0	1,2	1,4
heavy shocks T2 + 100%	1,0	1,3	1,5	1,8

b_2

Type of motor	Number of starts per hour			
	1 – 6	6 – 30	30 – 120	120 – 600
Electric-, Oil-, Air-Motor	1,0	1,1	1,2	1,3
Combustion engine 4 – 8 cyl.	1,2	1,3	1,4	1,6
Combustion engine 1 – 3 cyl.	1,3	1,4	1,6	1,7

b_3

Temperature of the gearbox	Ambient Temperature °C				
	15 – 25	25 – 32	32 – 40	40 – 45	45 – 50
65 – 75 °C	1,2	1,4	1,8	2,2	2,4
75 – 85 °C	1,0	1,2	1,5	1,8	2,0
85 – 95 °C	0,9	1,1	1,4	1,6	1,8
95 – 100 °C	0,8	1,0	1,2	1,4	1,6

b_4

Max. Running-Time under Load during 10 minutes	
0 – 2 min	0,6
2 – 4 min	0,7
4 – 6 min	0,8
6 – 8 min	0,9
8 – 10 min	1,0

Standard IEC flange

	standard IEC flange															
size	56B5	63B5	63B14	71B5	71B14	80B5	80B14	90B5	90B14	100B14	100B5	112B14	112B5	132B5	160B5	180B5
uniCe 035	X		X		X											
uniTeCe 035	X		X		X											
uniCe 040	X		X		X		X									
uniTeCe 040	X		X		X											
uniCe 050		X		X			X		X							
uniTeCe 050		X		X			X									
uniCe 063				X		X			X	X		X				
uniTeCe 063				X		X			X							
uniCe 080						X		X			X		X	X		
uniCe 100						X		X			X		X	X	X	X

The table shows possible motor flange depending to the size.

max. torque

Below-mentioned the max. torque, depended on size and rpm.

By the same the efficiency and max. allowed driving power.

n_1 = 3000 min^{-1}	uniCe 035			uniCe 040			uniCe 050			uniCe 063			uniCe 080			uniCe 100		
i_{ges}	T_{2max}	P_{1Tab}	η [%]	T_{2max}	P_{1Tab}	η [%]	T_{2max}	P_{1Tab}	η [%]	T_{2max}	P_{1Tab}	η [%]	T_{2max}	P_{1Tab}	η [%]	T_{2max}	P_{1Tab}	η [%]
6,00	62	1,27	0,88	124	1,85	0,89	176	3,30	0,91	338	8,69	0,94	640	9,91	0,93	1000	22,80	0,95
8,00	67	0,99	0,85	104	1,41	0,85	204	2,63	0,89	468	6,04	0,93	750	8,14	0,91	1160	19,00	0,94
10,00	88	0,86	0,82	142	1,28	0,83	288	2,32	0,87	746	5,38	0,90	634	7,65	0,90	1300	15,20	0,92
12,00	74	0,75	0,78	115	1,06	0,79	228	1,97	0,84	636	4,83	0,90	874	7,35	0,89	1300	13,20	0,90
16,00	56	0,59	0,73	91	0,84	0,74	191	1,62	0,81	498	3,84	0,87	693	6,25	0,87	1450	10,00	0,88
20,00	100	0,56	0,70	158	0,82	0,72	328	1,43	0,77	858	3,84	0,83	549	4,68	0,82	1160	7,78	0,85
25,00	84	0,47	0,65	130	0,68	0,66	259	1,21	0,72	730	2,87	0,82	1030	4,50	0,80	2070	7,04	0,83
30,00	67	0,42	0,60	103	0,62	0,60	235	1,05	0,70	608	2,30	0,85	856	4,09	0,78	1760	6,14	0,80
36,00	53	0,38	0,54	89	0,56	0,55	197	0,93	0,66	433	2,01	0,78	691	3,75	0,76	1420	5,26	0,76
40,00	51	0,36	0,52	84	0,56	0,56	172	0,87	0,63	438	1,76	0,76	615	3,46	0,74	1320	4,67	0,74
50,00	71	0,32	0,45	71	0,48	0,50	140	0,77	0,57	355	1,53	0,71	487	3,10	0,71	1030	4,06	0,68
63,00	33	0,27	0,38	56	0,42	0,43	113	0,62	0,50	280	1,32	0,66	386	2,65	0,66	836	3,27	0,63
80,00	28	0,27	0,35	41	0,36	0,34	76	0,51	0,44	233	1,21	0,53	370	2,09	0,57	740	3,15	0,58

n_1 = 1500 min^{-1}	uniCe 035			uniCe 040			uniCe 050			uniCe 063			uniCe 080			uniCe 100		
i_{ges}	T_{2max}	P_{1Tab}	η [%]	T_{2max}	P_{1Tab}	η [%]	T_{2max}	P_{1Tab}	η [%]	T_{2max}	P_{1Tab}	η [%]	T_{2max}	P_{1Tab}	η [%]	T_{2max}	P_{1Tab}	η [%]
6,00	70	0,87	0,89	140	1,29	0,89	198	2,34	0,91	406	6,18	0,94	820	10,10	0,94	1200	22,10	0,94
8,00	75	0,68	0,86	117	0,97	0,86	229	1,78	0,89	524	4,14	0,93	940	7,77	0,92	1310	16,80	0,93
10,00	98	0,56	0,83	158	0,84	0,84	321	1,53	0,87	832	3,58	0,90	708	6,35	0,89	1460	13,80	0,91
12,00	82	0,49	0,80	122	0,71	0,80	253	1,31	0,84	707	3,16	0,90	987	5,97	0,88	2030	11,80	0,89
16,00	64	0,37	0,74	103	0,56	0,74	217	1,08	0,81	565	2,48	0,87	783	5,17	0,86	1640	8,98	0,87
20,00	112	0,36	0,72	178	0,54	0,73	370	0,97	0,77	967	2,27	0,83	620	3,64	0,80	1310	7,46	0,83
25,00	93	0,30	0,66	144	0,43	0,66	288	0,77	0,72	811	1,81	0,82	1140	3,36	0,78	2300	6,74	0,81
30,00	74	0,28	0,61	113	0,40	0,61	257	0,69	0,70	666	1,50	0,83	951	3,15	0,76	1970	5,80	0,78
36,00	58	0,24	0,56	98	0,35	0,56	215	0,64	0,65	473	1,28	0,78	768	2,68	0,75	1570	5,00	0,74
40,00	57	0,23	0,53	93	0,35	0,57	190	0,58	0,62	484	1,15	0,76	683	2,45	0,72	1480	4,73	0,72
50,00	46	0,20	0,46	79	0,31	0,51	156	0,52	0,56	395	1,00	0,71	542	1,90	0,68	1150	3,95	0,66
63,00	36	0,17	0,40	62	0,25	0,44	125	0,42	0,50	311	0,84	0,65	429	1,56	0,64	907	3,40	0,60
80,00	31	0,17	0,36	45	0,23	0,34	82	0,32	0,44	252	0,77	0,52	411	1,49	0,54	801	2,81	0,56

n_1 = 1000 min^{-1}	uniCe 035			uniCe 040			uniCe 050			uniCe 063			uniCe 080			uniCe 100		
i_{ges}	T_{2max}	P_{1Tab}	η [%]	T_{2max}	P_{1Tab}	η [%]	T_{2max}	P_{1Tab}	η [%]	T_{2max}	P_{1Tab}	η [%]	T_{2max}	P_{1Tab}	η [%]	T_{2max}	P_{1Tab}	η [%]
6,00	74	0,70	0,87	148	1,02	0,88	208	1,83	0,90	428	4,73	0,93	870	7,21	0,93	1270	16,70	0,94
8,00	80	0,53	0,84	126	0,76	0,84	248	1,44	0,87	566	3,26	0,92	1016	5,62	0,91	1410	12,90	0,92
10,00	105	0,45	0,82	170	0,67	0,82	346	1,23	0,85	895	2,87	0,89	739	5,80	0,88	1610	10,50	0,90
12,00	88	0,40	0,78	138	0,56	0,77	272	1,03	0,82	760	2,55	0,88	1030	4,67	0,86	2150	8,79	0,88
16,00	68	0,31	0,72	110	0,44	0,72	232	0,81	0,79	606	1,94	0,85	814	3,65	0,84	1760	6,74	0,85
20,00	117	0,29	0,69	186	0,43	0,69	387	0,76	0,75	1012	1,80	0,81	644	2,98	0,79	1430	5,60	0,82
25,00	98	0,24	0,64	152	0,34	0,63	304	0,62	0,69	857	1,45	0,80	1200	2,50	0,77	2420	5,10	0,79
30,00	79	0,22	0,58	120	0,31	0,57	257	0,55	0,67	709	1,16	0,82	1000	2,15	0,75	2050	4,44	0,76
36,00	62	0,19	0,53	104	0,29	0,52	229	0,51	0,62	504	1,01	0,76	807	1,79	0,74	1650	3,79	0,72
40,00	60	0,19	0,50	98	0,29	0,53	200	0,47	0,59	509	0,89	0,74	718	1,68	0,70	1570	3,63	0,69
50,00	48	0,15	0,43	84	0,25	0,47	162	0,42	0,53	410	0,75	0,68	569	1,40	0,66	1190	3,04	0,63
63,00	38	0,13	0,37	65	0,21	0,40	131	0,34	0,46	323	0,66	0,62	450	1,21	0,61	943	2,59	0,57
80,00	33	0,13	0,33	47	0,19	0,31	87	0,25	0,41	266	0,60	0,49	435	1,11	0,49	847	2,09	0,53

n_1 = 750 min^{-1}	uniCe 035			uniCe 040			uniCe 050			uniCe 063			uniCe 080			uniCe 100		
i_{ges}	T_{2max}	P_{1Tab}	η [%]	T_{2max}	P_{1Tab}	η [%]	T_{2max}	P_{1Tab}	η [%]	T_{2max}	P_{1Tab}	η [%]	T_{2max}	P_{1Tab}	η [%]	T_{2max}	P_{1Tab}	η [%]
6,00	78	0,58	0,87	155	0,83	0,87	220	1,53	0,89	457	3,98	0,93	924	5,81	0,93	1350	14,00	0,93
8,00	84	0,44	0,84	133	0,64	0,84	260	1,19	0,87	600	2,67	0,92	1060	4,77	0,91	1480	10,30	0,92
10,00	109	0,37	0,82	176	0,56	0,82	358	1,05	0,85	928	2,45	0,88	799	4,47	0,87	1650	8,31	0,90
12,00	82	0,32	0,78	144	0,46	0,77	285	0,87	0,81	794	2,16	0,87	1100	3,81	0,85	2250	7,17	0,88
16,00	70	0,25	0,72	113	0,36	0,71	238	0,70	0,78	619	1,61	0,84	874	3,12	0,83	1840	5,55	0,85
20,00	122	0,23	0,69	194	0,36	0,69	404	0,63	0,74	1056	1,49	0,80	691	2,45	0,77	1460	4,50	0,81
25,00	104	0,20	0,63	160	0,29	0,63	320	0,52	0,68	901	1,20	0,78	1280	2,02	0,75	2550	4,09	0,79
30,00	81	0,18	0,58	124	0,26	57,00	282	0,46	0,66	732	0,95	0,81	1060	1,80	0,73	2140	3,50	0,76
36,00	65	0,15	0,52	108	0,23	0,52	238	0,43	0,61	523	0,87	0,74	859	1,53	0,72	1720	3,04	0,71
40,00	62	0,15	0,50	102	0,23	0,53	208	0,40	0,58	529	0,75	0,72	764	1,37	0,67	1600	2,86	0,69
50,00	49	0,13	0,43	83	0,20	0,46	165	0,34	0,51	419	0,64	0,67	606	1,23	0,62	1240	2,41	0,63
63,00	39	0,11	0,37	67	0,17	0,40	135	0,29	0,45	335	0,56	0,60	480	1,07	0,57	996	2,06	0,56
80,00	34	0,10	0,33	49	0,15	0,30	90	0,22	0,40	227	0,53	0,46	450	0,90	0,49	878	1,62	0,53

n_1 = 500 min^{-1}	uniCe 035			uniCe 040			uniCe 050			uniCe 063			uniCe 080			uniCe 100		
i_{ges}	T_{2max}	P_{1Tab}	η [%]	T_{2max}	P_{1Tab}	η [%]	T_{2max}	P_{1Tab}	η [%]	T_{2max}	P_{1Tab}	η [%]	T_{2max}	P_{1Tab}	η [%]	T_{2max}	P_{1Tab}	η [%]
6,00	84	0,44	0,87	167	0,65	0,87	236	1,21	0,88	480	3,17	0,92	973	4,32	0,92	1420	10,60	0,93
8,00	90	0,33	0,84	142	0,48	0,83	279	0,92	0,86	637	2,04	0,91	1140	3,65	0,90	1590	7,94	0,92
10,00	115	0,29	0,81	186	0,43	0,81	379	0,78	0,84	980	1,78	0,88	828	3,23	0,86	1800	6,31	0,90
12,00	97	0,24	0,77	152	0,35	0,76	301	0,66	0,80	839	1,59	0,86	1140	2,79	0,84	2380	5,48	0,88
16,00	76	0,19	0,71	123	0,28	0,70	258	0,54	0,77	673	1,25	0,83	904	2,20	0,81	1920	4,23	0,85
20,00	129	0,19	0,68	204	0,26	0,68	425	0,51	0,72	1045	1,15	0,79	716	1,80	0,76	1550	3,41	0,81
25,00	108	0,15	0,63	167	0,22	0,62	333	0,41	0,66	937	0,91	0,77	1330	1,50	0,74	2650	3,09	0,79
30,00	85	0,13	0,57	130	0,20	0,56	296	0,36	0,64	768	0,73	0,80	1110	1,30	0,72	2220	2,63	0,76
36,00	68	0,12	0,51	113	0,18	0,51	249	0,33	0,59	548	0,64	0,73	897	1,18	0,70	1790	2,28	0,71
40,00	65	0,11	0,48	107	0,18	0,52	218	0,31	0,55	553	0,57	0,70	798	1,07	0,64	1690	2,09	0,69
50,00	52	0,10	0,42	88	0,15	0,45	174	0,26	0,49	442	0,48	0,66	633	0,92	0,58	1300	1,79	0,63
63,00	41	0,09	0,36	70	0,12	0,39	142	0,22	0,42	350	0,42	0,58	500	0,83	0,51	1010	1,50	0,56
80,00	34	0,08	0,32	50	0,12	0,30	91	0,17	0,38	282	0,41	0,45	459	0,63	0,48	894	1,10	0,53

n_1 = 150 min^{-1}	uniCe 035			uniCe 040			uniCe 050			uniCe 063			uniCe 080			uniCe 100		
i_{ges}	T_{2max}	P_{1Tab}	η [%]	T_{2max}	P_{1Tab}	η [%]	T_{2max}	P_{1Tab}	η [%]	T_{2max}	P_{1Tab}	η [%]	T_{2max}	P_{1Tab}	η [%]	T_{2max}	P_{1Tab}	η [%]
6,00	99	0,20	0,85	198	0,28	0,85	280	0,53	0,88	575	1,32	0,92	1170	1,51	0,91	1700	4,71	0,92
8,00	106	0,14	0,82	164	0,21	0,81	322	0,35	0,85	737	0,86	0,91	1320	1,37	0,89	1830	3,50	0,90
10,00	131	0,12	0,79	212	0,19	0,79	433	0,33	0,83	1045	0,77	0,87	904	1,24	0,79	2070	2,79	0,88
12,00	109	0,10	0,75	170	0,15	0,74	336	0,28	0,78	936	0,68	0,86	1250	1,05	0,76	2800	2,38	0,85
16,00	85	0,08	0,68	137	0,12	0,67	289	0,22	0,75	754	0,52	0,82	995	0,89	0,72	2210	1,80	0,82
20,00	145	0,08	0,65	231	0,11	0,65	479	0,20	0,70	1045	0,48	0,76	787	0,72	0,66	1740	1,49	0,77
25,00	120	0,07	0,59	186	0,09	0,58	371	0,17	0,65	1045	0,37	0,76	1440	0,59	0,64	2910	1,34	0,74
30,00	95	0,06	0,54	145	0,09	0,52	330	0,14	0,62	854	0,29	0,79	1210	0,53	0,62	2430	1,14	0,71
36,00	74	0,06	0,48	124	0,08	0,47	274	0,13	0,57	605	0,26	0,72	973	0,46	0,60	1980	0,99	0,65
40,00	71	0,04	0,45	117	0,08	0,48	240	0,12	0,54	610	0,23	0,70	865	0,42	0,55	1850	0,94	0,63
50,00	56	0,04	0,39	96	0,07	0,42	190	0,11	0,47	481	0,20	0,64	687	0,39	0,49	1420	0,79	0,56
63,00	44	0,03	0,33	76	0,06	0,36	153	0,09	0,41	377	0,16	0,58	543	0,32	0,42	1110	0,56	0,50
80,00	37	0,03	0,29	54	0,04	0,26	99	0,06	0,37	306	0,14	0,43	498	0,22	0,44	971	0,41	0,46

Selection table based on power

P_{Mot} [kW]	n_2 [1/min]	$T_{2\ Tab}$ [Nm]	i_{ges}	η [%]	f_B	gear	$i_{pre\text{-}stage}$	motor
0,13	16,94	26,50	80,00	0,36	1,17	uniCe 035	-	63A-4B14
	21,51	23,18	63,00	0,40	1,55	uniCe 035	-	63A-4B14
	27,10	21,16	50,00	0,46	2,17	uniCe 035	-	63A-4B14
	33,88	19,50	40,00	0,53	2,92	uniCe 035	-	63A-4B14
	32,94	13,16	80,00	0,35	2,13	uniCe 035	-	56B-2B5
	37,64	18,55	36,00	0,56	3,13	uniCe 035	-	63A-4B14
	41,83	11,25	63,00	0,38	2,93	uniCe 035	-	56B-2B5
	8,67	92,03	156,25	0,64	0,27	uniTeCe 035	6,25	63A-4B14
	10,84	80,32	125,00	0,70	0,25	uniTeCe 035	6,25	63A-4B14
	10,54	59,27	250,00	0,50	0,67	uniTeCe 035	6,25	56B-2B5
	11,71	55,39	225,00	0,52	0,65	uniTeCe 035	6,25	56B-2B5
	13,55	66,04	100,00	0,72	0,24	uniTeCe 035	6,25	63A-4B14
	14,05	51,29	187,50	0,58	0,58	uniTeCe 035	6,25	56B-2B5
	16,86	46,30	156,25	0,63	0,54	uniTeCe 035	6,25	56B-2B5
	18,07	53,54	75,00	0,78	0,22	uniTeCe 035	6,25	63A-4B14
	21,08	39,89	125,00	0,68	0,50	uniTeCe 035	6,25	56B-2B5
	36,13	29,78	37,50	0,86	0,20	uniTeCe 035	6,25	63A-4B14
	42,16	23,36	62,50	0,80	0,43	uniTeCe 035	6,25	56B-2B5
	52,70	19,38	50,00	0,82	0,41	uniTeCe 035	6,25	56B-2B5
	5,42	162,86	250,00	0,71	0,12	uniTeCe 040	12,5	63A-4B14
	6,02	112,44	225,00	0,54	0,32	uniTeCe 040	6,25	63A-4B14
	7,23	102,07	187,50	0,59	0,29	uniTeCe 040	6,25	63A-4B14
	9,03	107,09	150,00	0,78	0,11	uniTeCe 040	12,5	63A-4B14
	3,61	234,26	375,00	0,68	0,13	uniTeCe 050	12,5	63A-4B5
	4,34	156,17	312,50	0,54	0,32	uniTeCe 050	6,25	63A-4B5

P_{Mot} [kW]	n_2 [1/min]	$T_{2\ Tab}$ [Nm]	i_{ges}	η [%]	f_B	gear	$i_{pre\text{-}stage}$	motor
0,18	17,41	35,42	80,00	0,36	0,88	uniCe 035	-	63B-4B14
	22,11	31,00	63,00	0,40	1,16	uniCe 035	-	63B-4B14
	27,86	28,29	50,00	0,46	1,63	uniCe 035	-	63B-4B14
	34,83	26,08	40,00	0,53	2,19	uniCe 035	-	63B-4B14
	38,69	24,80	36,00	0,56	2,34	uniCe 035	-	63B-4B14
	44,57	14,60	63,00	0,38	2,26	uniCe 035	-	63A-2B14
	46,43	22,51	30,00	0,61	3,29	uniCe 035	-	63B-4B14
	69,50	12,69	40,00	0,52	4,02	uniCe 035	-	63A-2B14
	11,14	107,38	125,00	0,70	0,19	uniTeCe 035	6,25	63B-4B14
	18,57	71,59	75,00	0,78	0,17	uniTeCe 035	6,25	63B-4B14
	37,07	34,61	75,00	0,76	0,35	uniTeCe 035	6,25	63A-2B14
	37,33	39,82	37,50	0,86	0,15	uniTeCe 035	6,25	63B-4B14
	45,12	30,32	62,50	0,80	0,33	uniTeCe 035	6,25	63A-2B14
	56,88	25,15	50,00	0,82	0,32	uniTeCe 035	6,25	63A-2B14
	77,12	19,53	37,50	0,85	0,31	uniTeCe 035	6,25	63A-2B14
	7,43	136,46	187,50	0,59	0,22	uniTeCe 040	6,25	63B-4B14
	8,92	123,04	156,25	0,64	0,20	uniTeCe 040	6,25	63B-4B14
	9,29	143,17	150,00	0,78	0,08	uniTeCe 040	12,5	63B-4B14
	13,08	73,22	225,00	0,53	0,49	uniTeCe 040	6,25	63A-2B14
	13,93	88,29	100,00	0,72	0,18	uniTeCe 040	6,25	63B-4B14
	3,71	313,19	375,00	0,68	0,10	uniTeCe 050	12,5	63B-4B5
	4,46	268,45	312,50	0,70	0,09	uniTeCe 050	12,5	63B-4B5
	5,57	184,93	250,00	0,60	0,22	uniTeCe 050	6,25	63B-4B5
	6,19	174,49	225,00	0,63	0,21	uniTeCe 050	6,25	63B-4B5

P_{Mot} [kW]	n_2 [1/min]	$T_{2\ Tab}$ [Nm]	i_{ges}	η [%]	f_B	gear	$i_{pre\text{-}stage}$	motor
0,25	22,22	43,09	63,00	0,40	0,84	uniCe 035	-	71A-4B14
	28,00	39,33	50,00	0,46	1,17	uniCe 035	-	71A-4B14
	35,00	36,25	40,00	0,53	1,57	uniCe 035	-	71A-4B14
	38,89	34,47	36,00	0,56	1,68	uniCe 035	-	71A-4B14
	44,13	20,59	63,00	0,38	1,60	uniCe 035	-	63B-2B14
	46,67	31,29	30,00	0,61	2,36	uniCe 035	-	71A-4B14
	92,67	31,66	30,00	0,61	2,34	uniCe 035	-	63C-4B14
	56,00	28,22	25,00	0,66	3,30	uniCe 035	-	71A-4B14
	55,20	28,55	25,00	0,66	3,26	uniCe 035	-	63C-4B14
	69,50	17,89	40,00	0,52	2,85	uniCe 035	-	63B-2B14
	77,22	16,72	36,00	0,54	3,17	uniCe 035	-	63B-2B14
	87,50	20,25	16,00	0,74	3,16	uniCe 035	-	71A-4B14
	86,25	20,48	16,00	0,74	3,12	uniCe 035	-	63C-4B14
	17,50	46,51	80,00	0,34	0,67	uniCe 040	-	71A-4B14
	17,79	84,72	156,25	0,63	0,30	uniTeCe 035	6,25	63B-2B14
	18,67	99,52	75,00	0,78	0,12	uniTeCe 035	6,25	71A-4B14
	22,40	86,05	62,50	0,81	0,12	uniTeCe 035	6,25	71A-4B14
	37,33	55,36	37,50	0,86	0,11	uniTeCe 035	6,25	71A-4B14
	44,48	42,75	62,50	0,80	0,23	uniTeCe 035	6,25	63B-2B14
	74,13	27,53	37,50	0,85	0,22	uniTeCe 035	6,25	63B-2B14
	8,96	171,05	156,25	0,64	0,15	uniTeCe 040	6,25	71A-4B14
	11,20	174,16	125,00	0,81	0,06	uniTeCe 040	12,5	71A-4B14
	22,24	176,20	125,00	0,81	0,06	uniTeCe 040	12,5	63C-4B14
	12,36	103,23	225,00	0,53	0,35	uniTeCe 040	6,25	63B-2B14
	14,00	142,65	100,00	0,83	0,06	uniTeCe 040	12,5	71A-4B14
	14,83	93,85	187,50	0,58	0,32	uniTeCe 040	6,25	63B-2B14
	5,60	319,30	250,00	0,75	0,06	uniTeCe 050	12,5	71A-4B5
	6,22	242,58	225,00	0,63	0,15	uniTeCe 050	6,25	71A-4B5
	7,47	217,70	187,50	0,68	0,14	uniTeCe 050	6,25	71A-4B5
	9,33	209,00	150,00	0,81	0,06	uniTeCe 050	12,5	71A-4B5
	3,11	582,20	450,00	0,76	0,06	uniTeCe 063	12,5	71A-4B5
	4,48	368,02	312,50	0,69	0,14	uniTeCe 063	6,25	71A-4B5

Selection table based on power

P_{Mot} [kW]	n_2 [1/min]	$T_{2\ Tab}$ [Nm]	i_{ges}	η [%]	f_B	gear	$i_{pre\text{-}stage}$	motor
0,37	34,15	54,91	40,00	0,53	1,04	uniCe 035	-	71B-4B14
	35,25	35,00	80,00	0,35	0,80	uniCe 035	-	71A-2B14
	37,94	52,21	36,00	0,56	1,11	uniCe 035	-	71B-4B14
	44,30	30,40	63,00	0,38	1,09	uniCe 035	-	63C-2B14
	45,53	47,40	30,00	0,61	1,56	uniCe 035	-	71B-4B14
	54,64	42,74	25,00	0,66	2,18	uniCe 035	-	71B-4B14
	55,82	28,58	50,00	0,45	2,48	uniCe 035	-	63C-2B14
	56,40	28,13	50,00	0,45	2,52	uniCe 035	-	71A-2B14
	68,30	37,30	20,00	0,72	3,00	uniCe 035	-	71B-4B14
	69,78	26,42	40,00	0,52	1,93	uniCe 035	-	63C-2B14
	70,50	26,00	40,00	0,52	1,96	uniCe 035	-	71A-2B14
	77,53	24,69	36,00	0,54	2,15	uniCe 035	-	63C-2B14
	78,33	24,30	36,00	0,54	2,18	uniCe 035	-	71A-2B14
	85,38	30,67	16,00	0,74	2,09	uniCe 035	-	71B-4B14
	93,03	22,86	30,00	0,60	2,93	uniCe 035	-	63C-2B14
	113,83	24,86	12,00	0,80	3,30	uniCe 035	-	71B-4B14
	174,44	14,83	16,00	0,73	3,78	uniCe 035	-	63C-2B14
	176,25	14,60	16,00	0,73	3,84	uniCe 035	-	71A-2B14
	21,68	71,79	63,00	0,44	0,50	uniCe 040	-	71B-4B14
	27,32	66,05	50,00	0,51	0,70	uniCe 040	-	71B-4B14
	17,08	91,17	80,00	0,44	0,34	uniCe 050	-	71B-4B5
	22,33	107,79	125,00	0,68	0,19	uniTeCe 035	6,25	63C-2B14
	36,43	83,85	37,50	0,86	0,07	uniTeCe 035	6,25	71B-4B14
	74,43	40,65	37,50	0,85	0,15	uniTeCe 035	6,25	63C-2B14
	18,21	150,74	75,00	0,78	0,08	uniTeCe 040	6,25	71B-4B14
	28,20	89,73	100,00	0,72	0,18	uniTeCe 040	6,25	71A-2B14
	8,74	282,63	156,25	0,70	0,09	uniTeCe 050	6,25	71B-4B5
	9,11	316,55	150,00	0,81	0,04	uniTeCe 050	12,5	71B-4B5
	10,93	241,81	125,00	0,75	0,08	uniTeCe 050	6,25	71B-4B5
	11,16	194,02	250,00	0,61	0,21	uniTeCe 050	6,25	63C-2B5
	12,40	182,94	225,00	0,64	0,20	uniTeCe 050	6,25	63C-2B5
	13,66	203,50	100,00	0,79	0,08	uniTeCe 050	6,25	71B-4B5
	14,89	161,69	187,50	0,68	0,19	uniTeCe 050	6,25	63C-2B5
	3,64	781,95	375,00	0,81	0,04	uniTeCe 063	12,5	71B-4B5
	4,37	643,78	312,50	0,80	0,04	uniTeCe 063	12,5	71B-4B5
	5,46	477,34	250,00	0,74	0,08	uniTeCe 063	6,25	71B-4B5
	6,07	440,91	225,00	0,76	0,08	uniTeCe 063	6,25	71B-4B5
	7,29	390,98	187,50	0,81	0,08	uniTeCe 063	6,25	71B-4B5

P_{Mot} [kW]	n_2 [1/min]	$T_{2\ Tab}$ [Nm]	i_{ges}	η [%]	f_B	gear	$i_{pre\text{-}stage}$	motor
	46,20	69,36	30,00	0,61	1,07	uniCe 035	-	71C-4B14
	55,44	62,54	25,00	0,66	1,49	uniCe 035	-	71C-4B14
	56,88	41,63	50,00	0,45	1,71	uniCe 035	-	71B-2B14
	69,30	54,58	20,00	0,72	2,05	uniCe 035	-	71C-4B14
	71,10	38,48	40,00	0,52	1,33	uniCe 035	-	71B-2B14
	79,00	35,96	36,00	0,54	1,47	uniCe 035	-	71B-2B14
	86,63	44,87	16,00	0,74	1,43	uniCe 035	-	71C-4B14
	94,80	33,30	30,00	0,60	2,01	uniCe 035	-	71B-2B14
	113,76	30,06	25,00	0,65	2,79	uniCe 035	-	71B-2B14
	115,50	36,38	12,00	0,80	2,25	uniCe 035	-	71C-4B14
	138,60	31,46	10,00	0,83	3,12	uniCe 035	-	71C-4B14
	142,20	25,90	20,00	0,70	3,86	uniCe 035	-	71B-2B14
	173,25	26,08	8,00	0,86	2,88	uniCe 035	-	71C-4B14
	177,75	21,61	16,00	0,73	2,59	uniCe 035	-	71B-2B14
	231,00	20,24	6,00	0,89	3,46	uniCe 035	-	71C-4B14
	27,72	96,65	50,00	0,51	0,48	uniCe 040	-	71C-4B14
	34,65	86,41	40,00	0,57	0,66	uniCe 040	-	71C-4B14
	35,55	50,32	80,00	0,34	0,56	uniCe 040	-	71B-2B14
	38,50	76,41	36,00	0,56	0,76	uniCe 040	-	71C-4B14
	39,50	75,20	36,00	0,56	0,77	uniCe 040	-	80A-4B14
	45,14	50,12	63,00	0,43	0,66	uniCe 040	-	71B-2B14
	47,40	68,26	30,00	0,61	1,08	uniCe 040	-	80A-4B14
	56,88	61,55	25,00	0,66	1,51	uniCe 040	-	80A-4B14
	71,10	54,46	20,00	0,73	2,06	uniCe 040	-	80A-4B14
0,55	88,88	44,16	16,00	0,74	1,45	uniCe 040	-	80A-4B14
	118,50	35,81	12,00	0,80	2,29	uniCe 040	-	80A-4B14
	22,00	119,39	63,00	0,50	0,30	uniCe 050	-	71C-4B5
	22,57	117,50	63,00	0,50	0,31	uniCe 050	-	80A-4B14
	17,33	157,66	80,00	0,52	0,20	uniCe 063	-	71C-4B5
	75,84	59,22	37,50	0,85	0,10	uniTeCe 035	6,25	71B-2B14
	36,96	122,70	37,50	0,86	0,05	uniTeCe 040	6,25	71C-4B14
	11,09	353,84	125,00	0,75	0,06	uniTeCe 050	6,25	71C-4B5
	11,38	348,24	125,00	0,75	0,06	uniTeCe 050	6,25	80A-4B14
	15,17	235,53	187,50	0,68	0,13	uniTeCe 050	6,25	71B-2B5
	18,48	231,61	75,00	0,81	0,05	uniTeCe 050	6,25	71C-4B5
	28,44	145,35	100,00	0,79	0,11	uniTeCe 050	6,25	71B-2B5
	4,44	942,05	312,50	0,80	0,03	uniTeCe 063	12,5	71C-4B5
	5,54	762,83	250,00	0,81	0,03	uniTeCe 063	12,5	71C-4B5
	6,93	639,68	200,00	0,84	0,03	uniTeCe 063	12,5	71C-4B5
	7,39	572,12	187,50	0,81	0,05	uniTeCe 063	6,25	71C-4B5
	8,87	471,03	156,25	0,80	0,05	uniTeCe 063	6,25	71C-4B5
	9,24	496,30	150,00	0,87	0,02	uniTeCe 063	12,5	71C-4B5
	12,64	314,93	225,00	0,76	0,11	uniTeCe 063	6,25	71B-2B5
	13,86	319,84	100,00	0,84	0,05	uniTeCe 063	6,25	71C-4B5

Selection table based on power

P_{Mot} [kW]	n_2 [1/min]	$T_{2\ Tab}$ [Nm]	i_{ges}	η [%]	f_B	gear	$i_{pre\text{-}stage}$	motor
	35,65	114,23	40,00	0,57	0,50	uniCe 040	-	80B-4B14
	39,61	101,00	36,00	0,56	0,57	uniCe 040	-	80B-4B14
	45,90	67,18	63,00	0,43	0,49	uniCe 040	-	80A-2B14
	47,53	91,68	30,00	0,61	0,81	uniCe 040	-	80B-4B14
	57,04	82,67	25,00	0,66	1,13	uniCe 040	-	80B-4B14
	57,84	62,00	50,00	0,50	1,15	uniCe 040	-	80A-2B14
	71,30	73,15	20,00	0,73	1,53	uniCe 040	-	80B-4B14
	72,30	55,55	40,00	0,56	0,92	uniCe 040	-	80A-2B14
	80,33	49,10	36,00	0,55	1,08	uniCe 040	-	80A-2B14
	89,13	59,32	16,00	0,74	1,08	uniCe 040	-	80B-4B14
	96,40	44,64	30,00	0,60	1,50	uniCe 040	-	80A-2B14
	115,68	40,92	25,00	0,66	2,05	uniCe 040	-	80A-2B14
	118,83	48,10	12,00	0,80	1,70	uniCe 040	-	80B-4B14
	142,60	42,08	10,00	0,84	2,33	uniCe 040	-	80B-4B14
	178,25	34,47	8,00	0,86	2,18	uniCe 040	-	80B-4B14
	180,75	29,36	16,00	0,74	1,91	uniCe 040	-	80A-2B14
0,75	28,52	140,28	50,00	0,56	0,33	uniCe 050	-	80B-4B14
	17,83	208,42	80,00	0,52	0,15	uniCe 063	-	80B-4B5
	22,63	205,16	63,00	0,65	0,18	uniCe 063	-	80B-4B5
	19,01	306,16	75,00	0,81	0,04	uniTeCe 050	6,25	80B-4B14
	38,03	165,84	37,50	0,88	0,04	uniTeCe 050	6,25	80B-4B14
	38,56	151,55	75,00	0,81	0,08	uniTeCe 050	6,25	80A-2B14
	77,12	82,09	37,50	0,88	0,07	uniTeCe 050	6,25	80A-2B14
	5,70	1008,39	250,00	0,81	0,02	uniTeCe 063	12,5	80B-4B5
	7,61	756,29	187,50	0,81	0,04	uniTeCe 063	6,25	80B-4B5
	9,13	622,65	156,25	0,80	0,04	uniTeCe 063	6,25	80B-4B5
	11,41	504,19	125,00	0,81	0,04	uniTeCe 063	6,25	80B-4B5
	12,85	422,18	225,00	0,76	0,09	uniTeCe 063	6,25	80A-2B5
	14,46	418,57	200,00	0,84	0,04	uniTeCe 063	12,5	80A-2B5
	15,42	383,39	187,50	0,82	0,08	uniTeCe 063	6,25	80A-2B5
	19,28	324,76	150,00	0,87	0,04	uniTeCe 063	12,5	80A-2B5

P_{Mot} [kW]	n_2 [1/min]	$T_{2\ Tab}$ [Nm]	i_{ges}	η [%]	f_B	gear	$i_{pre\text{-}stage}$	motor
	46,33	138,35	30,00	0,61	0,53	uniCe 040	-	80C-4B14
	55,60	124,74	25,00	0,66	0,75	uniCe 040	-	80C-4B14
	69,50	110,38	20,00	0,73	1,01	uniCe 040	-	80C-4B14
	72,13	81,54	40,00	0,56	0,63	uniCe 040	-	80B-2B14
	80,14	72,07	36,00	0,55	0,74	uniCe 040	-	80B-2B14
	86,88	89,51	16,00	0,74	0,72	uniCe 040	-	80C-4B14
	96,17	65,52	30,00	0,60	1,02	uniCe 040	-	80B-2B14
	115,83	72,58	12,00	0,80	1,13	uniCe 040	-	80C-4B14
	139,00	63,50	10,00	0,84	1,54	uniCe 040	-	80C-4B14
	144,25	52,42	20,00	0,72	1,91	uniCe 040	-	80B-2B14
	173,75	52,01	8,00	0,86	1,44	uniCe 040	-	80C-4B14
	180,31	43,10	16,00	0,74	1,30	uniCe 040	-	80B-2B14
	231,67	40,37	6,00	0,89	1,73	uniCe 040	-	80C-4B14
	240,42	34,51	12,00	0,79	2,38	uniCe 040	-	80B-2B14
	34,75	187,49	40,00	0,62	0,30	uniCe 050	-	80C-4B14
	39,89	172,22	36,00	0,65	0,34	uniCe 050	-	90S-4B14
	38,61	176,90	36,00	0,65	0,33	uniCe 050	-	80C-4B14
	57,44	132,48	25,00	0,72	0,70	uniCe 050	-	90S-4B14
	57,70	103,74	50,00	0,57	0,68	uniCe 050	-	80B-2B14
	89,75	95,39	16,00	0,81	0,67	uniCe 050	-	90S-4B14
	119,67	74,19	12,00	0,84	1,11	uniCe 050	-	90S-4B14
1,1	22,79	301,39	63,00	0,65	0,12	uniCe 063	-	90S-4B14
	22,06	309,58	63,00	0,65	0,12	uniCe 063	-	80C-4B5
	28,72	261,28	50,00	0,71	0,18	uniCe 063	-	90S-4B14
	36,06	154,34	80,00	0,53	0,18	uniCe 063	-	80B-2B5
	47,87	183,26	30,00	0,83	0,40	uniCe 063	-	90S-4B14
	17,38	326,59	80,00	0,54	0,09	uniCe 080	-	80C-4B5
	23,08	339,84	125,00	0,75	0,06	uniTeCe 050	6,25	80B-2B14
	57,70	157,12	50,00	0,86	0,05	uniTeCe 050	6,25	80B-2B14
	76,93	120,49	37,50	0,88	0,05	uniTeCe 050	6,25	80B-2B14
	9,19	914,71	156,25	0,80	0,03	uniTeCe 063	6,25	90S-4B14
	9,23	904,77	312,50	0,80	0,03	uniTeCe 063	12,5	80B-2B5
	11,49	740,69	125,00	0,81	0,03	uniTeCe 063	6,25	90S-4B14
	11,12	760,82	125,00	0,81	0,03	uniTeCe 063	6,25	80C-4B5
	14,36	621,11	100,00	0,84	0,03	uniTeCe 063	6,25	90S-4B14
	6,95	1275,98	200,00	0,84	0,01	uniTeCe 063	12,5	80B-2B5
	7,41	1168,73	187,50	0,82	0,03	uniTeCe 063	6,25	80B-2B5
	19,15	481,90	75,00	0,87	0,02	uniTeCe 063	6,25	90S-4B14
	9,27	989,98	150,00	0,87	0,01	uniTeCe 063	12,5	80B-2B5
	28,72	331,97	50,00	0,90	0,02	uniTeCe 063	6,25	90S-4B14
	13,90	637,99	100,00	0,84	0,03	uniTeCe 063	6,25	80B-2B5
	38,29	251,66	37,50	0,91	0,02	uniTeCe 063	6,25	90S-4B14

Selection table based on power

P_{Mot} [kW]	n_2 [1/min]	$T_{2\ Tab}$ [Nm]	i_{ges}	η [%]	f_B	gear	$i_{pre\text{-}stage}$	motor
1,5	39,64	234,70	36,00	0,65	0,25	uniCe050	-	90L-4B14
	47,57	210,63	30,00	0,70	0,35	uniCe050	-	90L-4B14
	57,08	180,54	25,00	0,72	0,52	uniCe050	-	90L-4B14
	71,35	154,46	20,00	0,77	0,73	uniCe050	-	90L-4B14
	89,19	129,99	16,00	0,81	0,49	uniCe050	-	90L-4B14
	118,92	101,10	12,00	0,84	0,81	uniCe050	-	90L-4B14
	142,70	87,26	10,00	0,87	1,12	uniCe050	-	90L-4B14
	178,38	71,41	8,00	0,89	1,05	uniCe050	-	90L-4B14
	237,83	54,76	6,00	0,91	1,28	uniCe050	-	90L-4B14
	28,54	356,07	50,00	0,71	0,13	uniCe063	-	90L-4B14
	35,68	304,91	40,00	0,76	0,19	uniCe063	-	90L-4B14
	46,06	204,99	63,00	0,66	0,16	uniCe063	-	90S-2B14
	17,84	433,30	80,00	0,54	0,07	uniCe080	-	90L-4B5
	22,65	404,41	63,00	0,64	0,09	uniCe080	-	90L-4B5
	11,42	1009,39	125,00	0,81	0,02	uniTeCe63	6,25	90L-4B14
	19,03	656,71	75,00	0,87	0,02	uniTeCe63	6,25	90L-4B14
	22,83	547,26	62,50	0,87	0,02	uniTeCe63	6,25	90L-4B14
	28,54	452,40	50,00	0,90	0,02	uniTeCe63	6,25	90L-4B14
	38,05	342,95	37,50	0,91	0,02	uniTeCe63	6,25	90L-4B14

P_{Mot} [kW]	n_2 [1/min]	$T_{2\ Tab}$ [Nm]	i_{ges}	η [%]	f_B	gear	$i_{pre\text{-}stage}$	motor
2,2	81,06	174,64	36,00	0,66	0,30	uniCe 050	-	90L-2B14
	97,27	154,35	30,00	0,70	0,43	uniCe 050	-	90L-2B14
	116,72	132,30	25,00	0,72	0,63	uniCe 050	-	90L-2B14
	145,90	113,19	20,00	0,77	0,88	uniCe 050	-	90L-2B14
	182,38	95,26	16,00	0,81	0,59	uniCe 050	-	90L-2B14
	243,17	74,09	12,00	0,84	1,00	uniCe 050	-	90L-2B14
	364,75	52,33	8,00	0,89	1,28	uniCe 050	-	90L-2B14
	46,32	305,61	63,00	0,66	0,11	uniCe 063	-	90L-2B14
	57,52	302,17	25,00	0,82	0,31	uniCe 063	-	100LA-4B14
	71,90	244,68	20,00	0,83	0,46	uniCe 063	-	100LA-4B14
	89,88	205,18	16,00	0,87	0,31	uniCe 063	-	100LA-4B14
	77,81	251,31	37,50	0,91	0,02	uniTeCe 063	6,25	90L-2B14

P_{Mot} [kW]	n_2 [1/min]	$T_{2\ Tab}$ [Nm]	i_{ges}	η [%]	f_B	gear	$i_{pre\text{-}stage}$	motor
3	40,19	554,86	36,00	0,78	0,10	uniCe 063	-	100LB-4B14
	48,23	492,02	30,00	0,83	0,15	uniCe 063	-	100LB-4B14
	57,88	405,08	25,00	0,82	0,23	uniCe 063	-	100LB-4B14
	58,06	350,39	50,00	0,71	0,20	uniCe 063	-	100L-2B14
	72,35	328,02	20,00	0,83	0,34	uniCe 063	-	100LB-4B14
	72,58	300,05	40,00	0,76	0,17	uniCe 063	-	100L-2B14
	80,64	277,15	36,00	0,78	0,19	uniCe 063	-	100L-2B14
	90,44	275,06	16,00	0,87	0,23	uniCe 063	-	100LB-4B14
	96,77	251,69	30,00	0,85	0,27	uniCe 063	-	100L-2B14
	116,12	202,34	25,00	0,82	0,42	uniCe 063	-	100L-2B14
	120,58	213,41	12,00	0,90	0,38	uniCe 063	-	100LB-4B14
	180,88	147,01	8,00	0,93	0,51	uniCe 063	-	100LB-4B14
	181,44	137,39	16,00	0,87	0,41	uniCe 063	-	100L-2B14
	241,17	111,45	6,00	0,94	0,63	uniCe 063	-	100LB-4B14
	36,18	569,09	40,00	0,72	0,10	uniCe 080	-	100LB-4B5
	36,29	450,07	80,00	0,57	0,06	uniCe 080	-	100L-2B5
	144,70	175,86	10,00	0,89	0,56	uniCe 080	-	100LB-4B5
	145,15	161,87	20,00	0,82	0,62	uniCe 080	-	100L-2B5
	18,09	885,25	80,00	0,56	0,04	uniCe 100	-	100LB-4B5
	22,97	746,93	63,00	0,60	0,05	uniCe 100	-	100LB-4B5
	28,94	652,08	50,00	0,66	0,07	uniCe 100	-	100LB-4B5

P_{Mot} [kW]	n_2 [1/min]	$T_{2\ Tab}$ [Nm]	i_{ges}	η [%]	f_B	gear	$i_{pre\text{-}stage}$	motor
4	48,67	651,63	30,00	0,83	0,11	uniCe 063	-	112M-4B14
	58,40	536,49	25,00	0,82	0,17	uniCe 063	-	112M-4B14
	58,86	460,44	50,00	0,71	0,15	uniCe 063	-	112M-2B5
	73,00	434,42	20,00	0,83	0,26	uniCe 063	-	112M-4B14
	73,58	394,29	40,00	0,76	0,13	uniCe 063	-	112M-2B5
	81,75	364,20	36,00	0,78	0,15	uniCe 063	-	112M-2B5
	91,25	364,29	16,00	0,87	0,18	uniCe 063	-	112M-4B14
	98,10	330,74	30,00	0,85	0,20	uniCe 063	-	112M-2B5
	117,72	265,89	25,00	0,82	0,32	uniCe 063	-	112M-2B5
	121,67	282,64	12,00	0,90	0,29	uniCe 063	-	112M-4B14
	146,00	235,53	10,00	0,90	0,42	uniCe 063	-	112M-4B14
	147,15	215,30	20,00	0,83	0,46	uniCe 063	-	112M-2B5
	182,50	194,70	8,00	0,93	0,39	uniCe 063	-	112M-4B14
	183,94	180,54	16,00	0,87	0,31	uniCe 063	-	112M-2B5
	243,33	147,60	6,00	0,94	0,47	uniCe 063	-	112M-4B14
	23,17	989,23	63,00	0,60	0,04	uniCe 100	-	112M-4B14
	29,20	863,61	50,00	0,66	0,05	uniCe 100	-	112M-4B14
	36,50	753,70	40,00	0,72	0,08	uniCe 100	-	112M-4B14
	36,79	601,81	80,00	0,58	0,05	uniCe 100	-	112M-2B5
	40,56	697,17	36,00	0,74	0,08	uniCe 100	-	112M-4B14
	46,71	514,78	63,00	0,63	0,06	uniCe 100	-	112M-2B5

Selection table based on power

P_{Mot} [kW]	n_2 [1/min]	$T_{2\ Tab}$ [Nm]	i_{ges}	η [%]	f_B	gear	$i_{pre\text{-}stage}$	motor
5,5	58,16	704,34	25,00	0,78	0,13	uniCe 080	-	132S-4B5
	81,67	488,92	36,00	0,76	0,11	uniCe 080	-	132SA-2B5
	98,00	418,16	30,00	0,78	0,16	uniCe 080	-	132SA-2B5
	117,60	357,40	25,00	0,80	0,24	uniCe 080	-	132SA-2B5
	121,17	381,43	12,00	0,88	0,21	uniCe 080	-	132S-4B5
	145,40	321,47	10,00	0,89	0,30	uniCe 080	-	132S-4B5
	183,75	248,75	16,00	0,87	0,23	uniCe 080	-	132SA-2B5
	294,00	160,83	10,00	0,90	0,55	uniCe 080	-	132SA-2B5
	29,08	1191,96	50,00	0,66	0,04	uniCe 100	-	132S-4B5
	46,67	709,26	63,00	0,63	0,05	uniCe 100	-	132SA-2B5

P_{Mot} [kW]	n_2 [1/min]	$T_{2\ Tab}$ [Nm]	i_{ges}	η [%]	f_B	gear	$i_{pre\text{-}stage}$	motor
7,5	48,67	1118,57	30,00	0,76	0,07	uniCe 080	-	132MA-4B5
	81,25	670,05	36,00	0,76	0,08	uniCe 080	-	132SB-2B5
	91,25	675,07	16,00	0,86	0,09	uniCe 080	-	132MA-4B5
	97,50	573,07	30,00	0,78	0,12	uniCe 080	-	132SB-2B5
	117,00	489,80	25,00	0,80	0,17	uniCe 080	-	132SB-2B5
	146,00	436,63	10,00	0,89	0,22	uniCe 080	-	132MA-4B5
	182,50	361,08	8,00	0,92	0,21	uniCe 080	-	132MA-4B5
	243,33	276,70	6,00	0,94	0,25	uniCe 080	-	132MA-4B5
	292,50	220,41	10,00	0,90	0,40	uniCe 080	-	132SB-2B5
	46,43	972,01	63,00	0,63	0,03	uniCe 100	-	132SB-2B5
	73,00	814,40	20,00	0,83	0,14	uniCe 100	-	132MA-4B5

P_{Mot} [kW]	n_2 [1/min]	$T_{2\ Tab}$ [Nm]	i_{ges}	η [%]	f_B	gear	$i_{pre\text{-}stage}$	motor
11	40,78	1906,36	36,00	0,74	0,03	uniCe 100	-	160M-4B5
	48,93	1674,50	30,00	0,78	0,04	uniCe 100	-	160M-4B5
	58,72	1449,09	25,00	0,81	0,06	uniCe 100	-	160M-4B5
	73,40	1187,90	20,00	0,83	0,09	uniCe 100	-	160M-4B5
	81,58	978,67	36,00	0,76	0,05	uniCe 100	-	160MA-2B5
	91,75	996,12	16,00	0,87	0,06	uniCe 100	-	160M-4B5

P_{Mot} [kW]	n_2 [1/min]	$T_{2\ Tab}$ [Nm]	i_{ges}	η [%]	f_B	gear	$i_{pre\text{-}stage}$	motor
15	73,00	1628,79	20,00	0,83	0,07	uniCe 100	-	160L-4B5
	97,93	1170,24	30,00	0,80	0,06	uniCe 100	-	160MB-2B5
	121,67	1047,92	12,00	0,89	0,08	uniCe 100	-	160L-4B5
	146,00	892,89	10,00	0,91	0,11	uniCe 100	-	160L-4B5
	146,90	828,92	20,00	0,85	0,12	uniCe 100	-	160MB-2B5
	182,50	730,01	8,00	0,93	0,10	uniCe 100	-	160L-4B5
	243,33	553,40	6,00	0,94	0,13	uniCe 100	-	160L-4B5
	244,83	526,61	12,00	0,90	0,14	uniCe 100	-	160MB-2B5
	293,80	448,59	10,00	0,92	0,20	uniCe 100	-	160MB-2B5
	489,67	277,93	6,00	0,95	0,22	uniCe 100	-	160MB-2B5

P_{Mot} [kW]	n_2 [1/min]	$T_{2\ Tab}$ [Nm]	i_{ges}	η [%]	f_B	gear	$i_{pre\text{-}stage}$	motor
18,5	73,55	1777,48	40,00	0,74	0,03	uniCe100	-	160L-2B5
	81,72	1642,97	36,00	0,76	0,03	uniCe 100	-	160L-2B5
	98,07	1441,20	30,00	0,80	0,05	uniCe100	-	160L-2B5
	117,68	1246,04	25,00	0,83	0,07	uniCe100	-	160L-2B5
	147,10	1020,85	20,00	0,85	0,10	uniCe100	-	160L-2B5
	183,88	845,50	16,00	0,88	0,07	uniCe100	-	160L-2B5
	245,17	648,54	12,00	0,90	0,11	uniCe100	-	160L-2B5
	294,20	552,46	10,00	0,92	0,16	uniCe 100	-	160L-2B5
	367,75	451,58	8,00	0,94	0,15	uniCe 100	-	160L-2B5
	490,33	342,29	6,00	0,95	0,18	uniCe100	-	160L-2B5

Measurements uniCe 035 & uniTeCe 035

uniCe-035-**N**-00-W-QH
gear with axle drive shaft and output hollow shaft

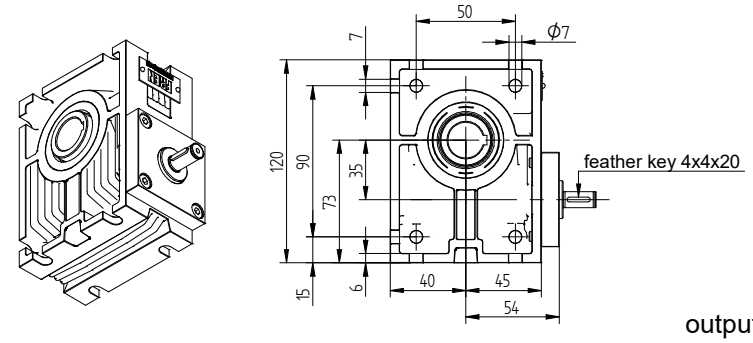

cut A-A

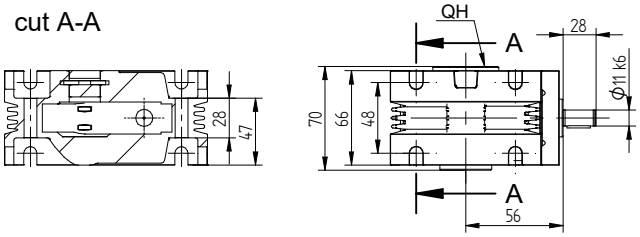

uniCe-035-**R**-00-W-QH
gear with axle drive shaft, output hollow shaft and adjustable slip coupling

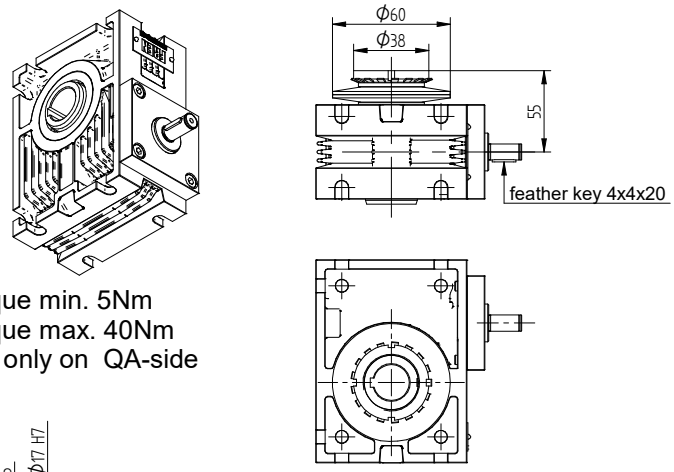

output torque min. 5Nm
output torque max. 40Nm
adjustable only on QA-side

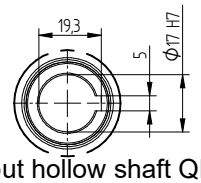

output hollow shaft QH

uniCe-035-N-00-W-**QAB**-00-**QC**
gear with two input and output shafts

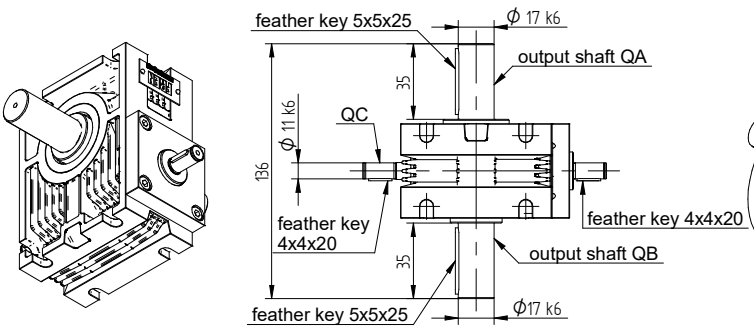

specify output shaft by order

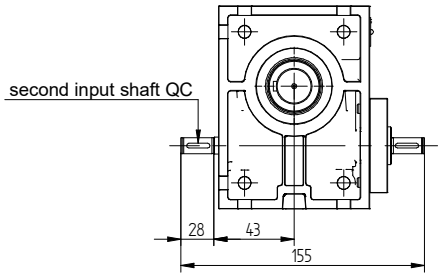

uniCe-035-N-00-W-**QB-FI**
gear with output shaft QB, output flange and axle drive shaft

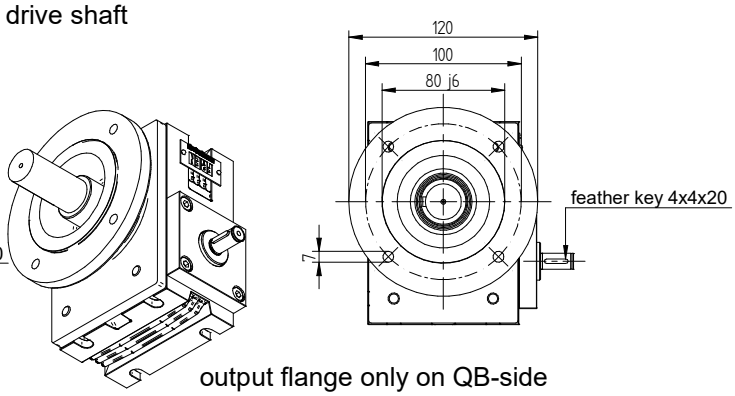

output flange only on QB-side
output shaft QH, QAB, QA and QB possible

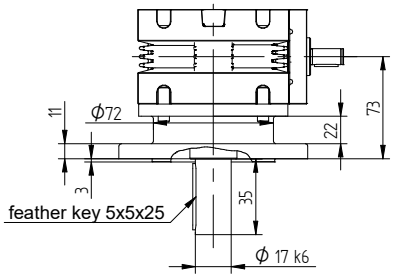

choice the gear according to the typ designation on page 4

uniCe-035-N-00-**JM/000/00**-QH

gear with input hollow shaft, output hollow shaft and flange

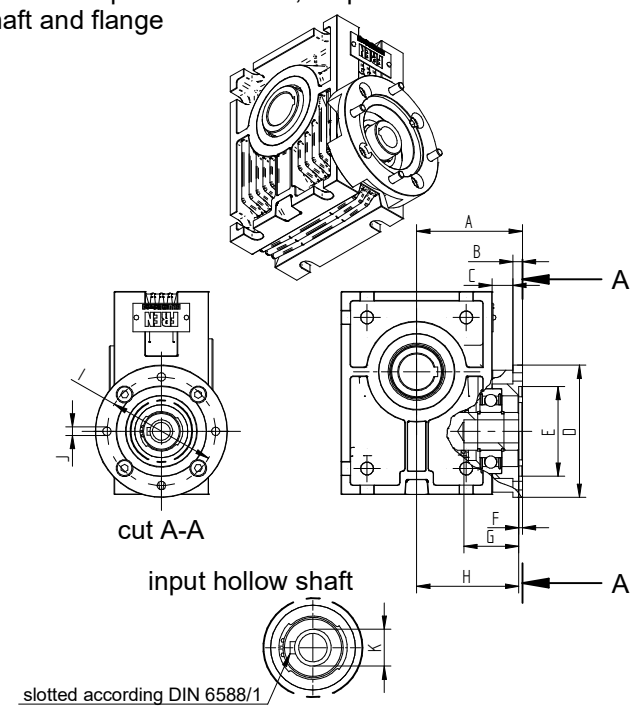

uniCe-035-N-00-**Motor**-QH

gear with output hollow shaft and motor

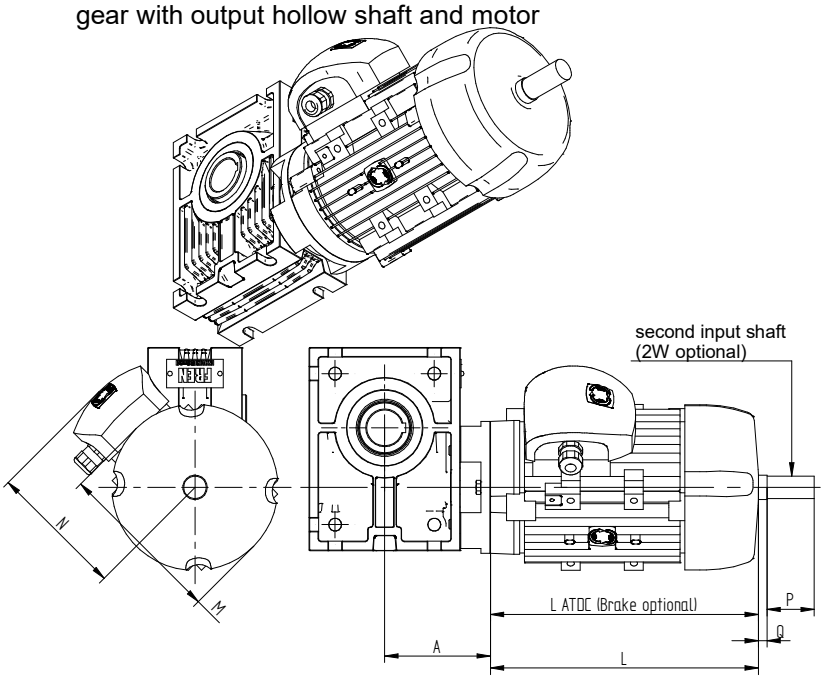

uni**Te**Ce-035-N-00-**Motor**-QH-00-**QC**

gear with pre-stage, output hollow shaft, second input shaft and motor

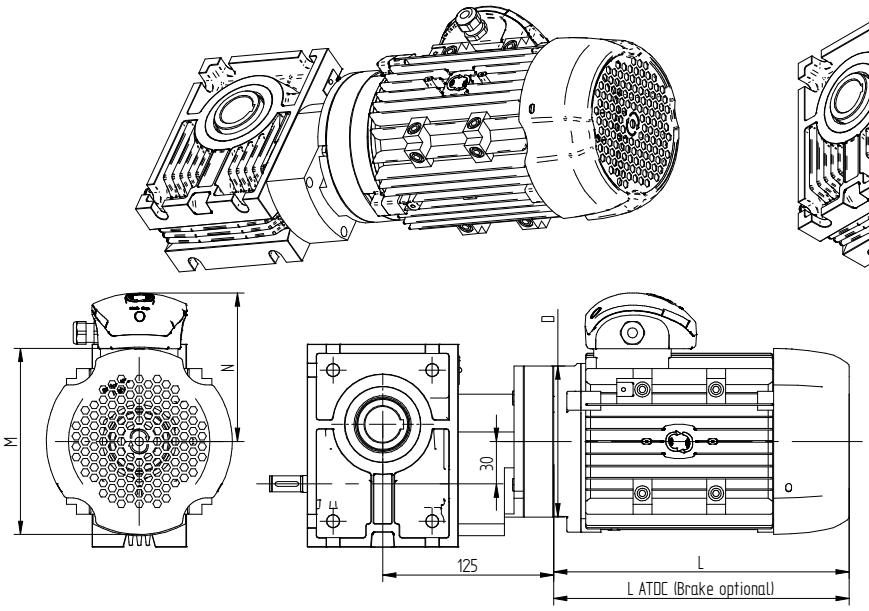

uni**Te**Ce-035-N-00-W-QH

gear with pre-stage, output hollow shaft, axle drive shaft and scond input shaft

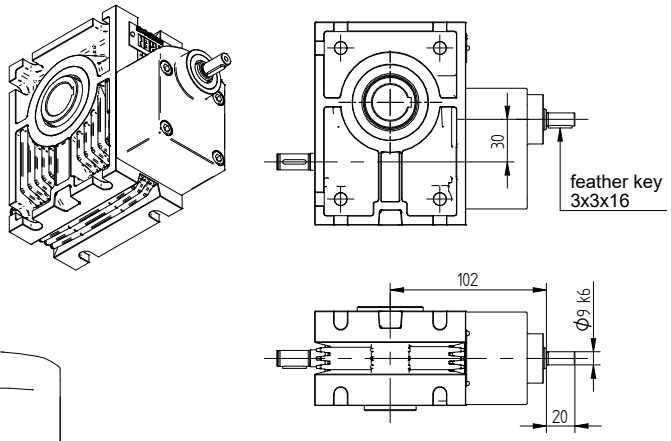

uniCe 035	A	B	C	D	E H7	F	G	H	I	J	K	L	LATDC	M	N	O	P	Q
63B14	65	7	13	90	60	3,5	30	62	75	6	9,11,14	192	276	130	114	11	23	3
71B14		8	12	105	70				85	7		214	300	145	119	14	30	3
56B5				120	80	4			100			178		120	102	9	20	3
		10	10	140	95				115	9								

Measurements uniCe 040 & uniTeCe 040

uniCe-040-**N**-00-W-QH
gear with axle drive shaft and output hollow shaft

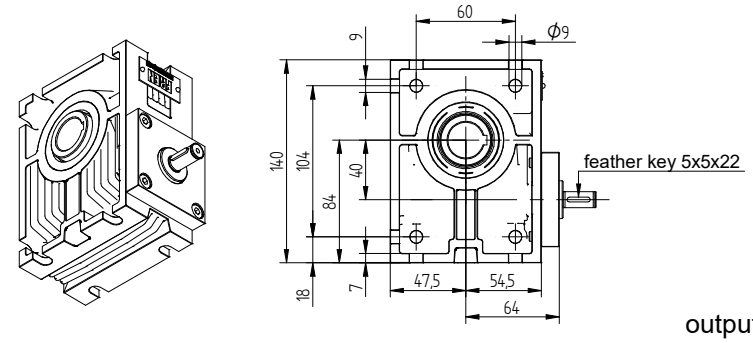

cut A-A

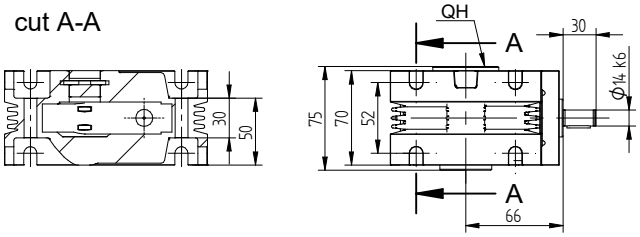

uniCe-040-**R**-00-W-QH
gear with axle drive shaft, output hollow shaft and adjustable slip coupling

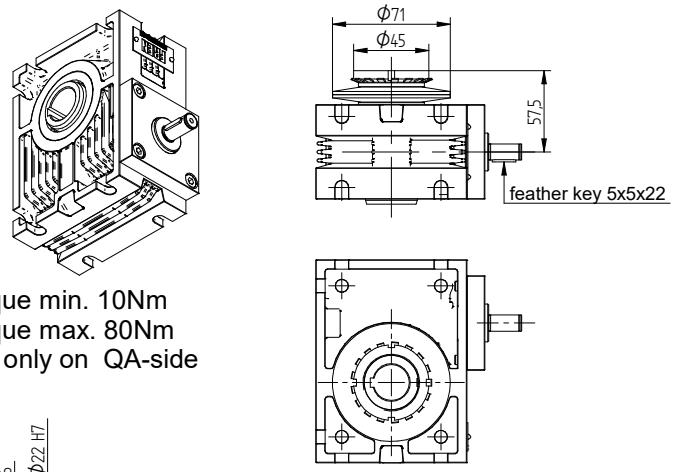

output torque min. 10Nm
output torque max. 80Nm
adjustable only on QA-side

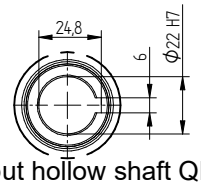

output hollow shaft QH

uniCe-040-N-00-W-**QAB**-00-**QC**
gear with two input and output shafts

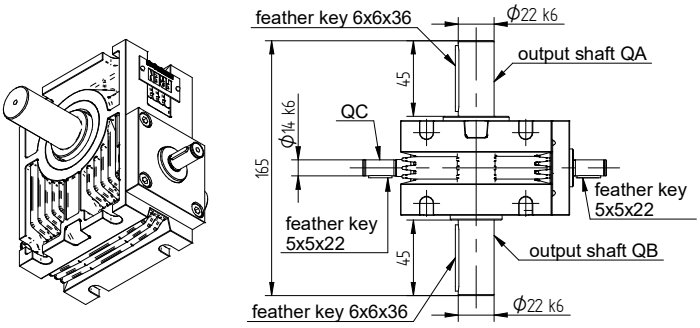

specify output shaft by order

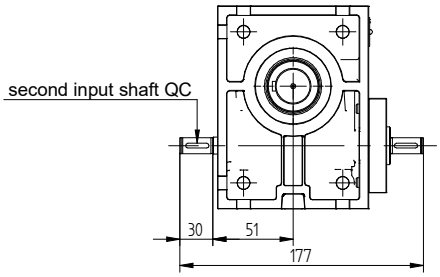

uniCe-040-N-00-W-**QB-FI**
gear with output shaft QB, output flange and axle drive shaft

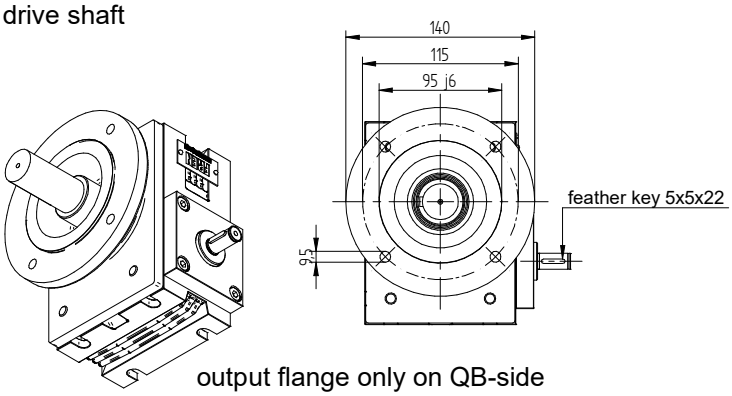

output flange only on QB-side
output shaft QH, QAB, QA and QB possible

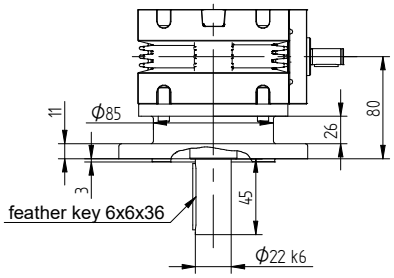

choice the gear according to the typ designation on page 4

uniCe-040-N-00-**JM/000/00**-QH

gear with input hollow shaft, output hollow shaft and flange

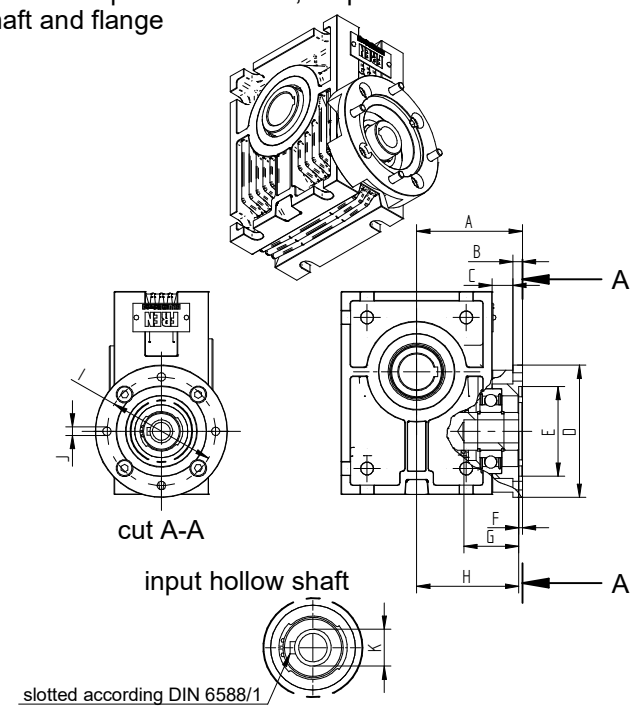

uniCe-040-N-00-**Motor**-QH

gear with output hollow shaft and motor

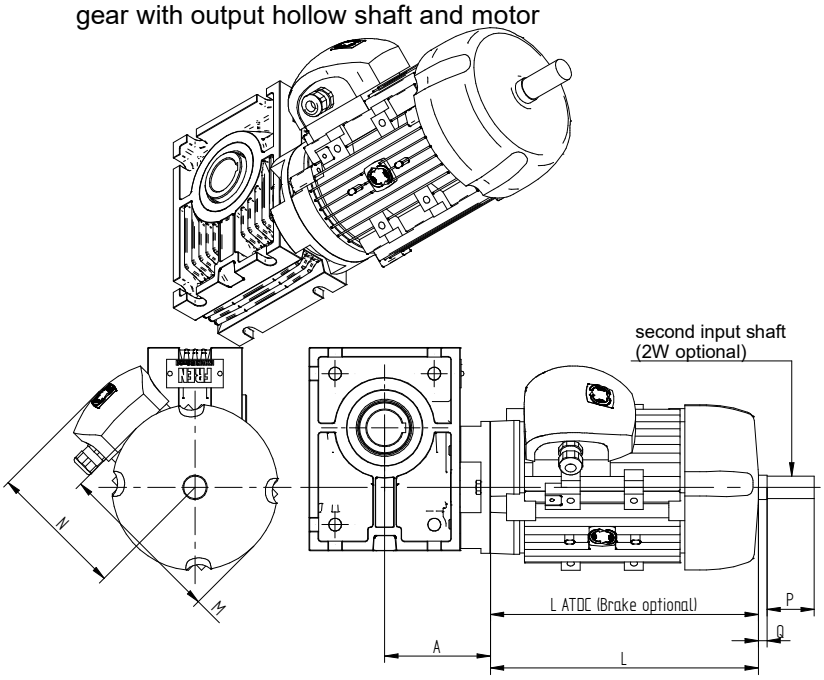

uni**Te**Ce-040-N-00-**Motor**-QH-00-**QC**

gear with pre-stage, output hollow shaft, second input shaft and motor

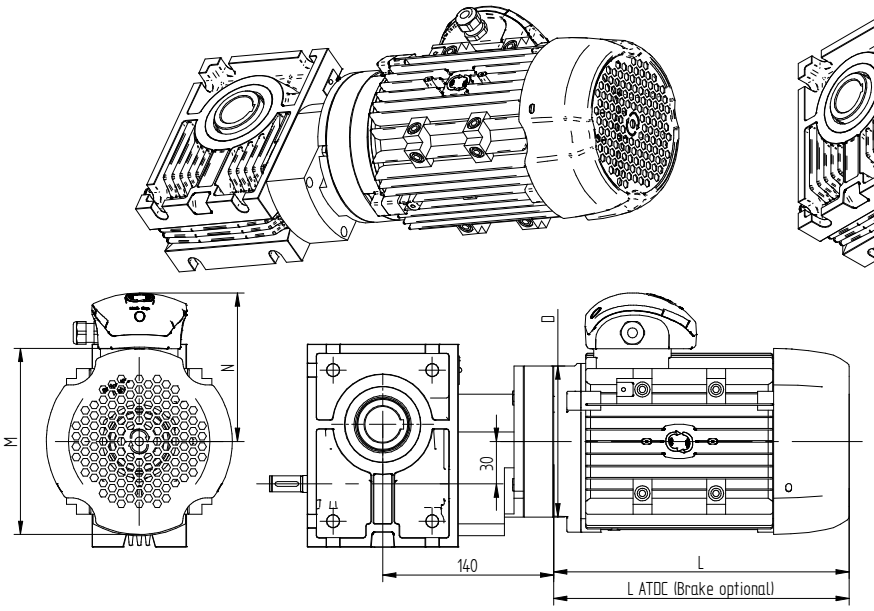

uni**Te**Ce-040-N-00-W-QH

gear with pre-stage, output hollow shaft, axle drive shaft and scond input shaft

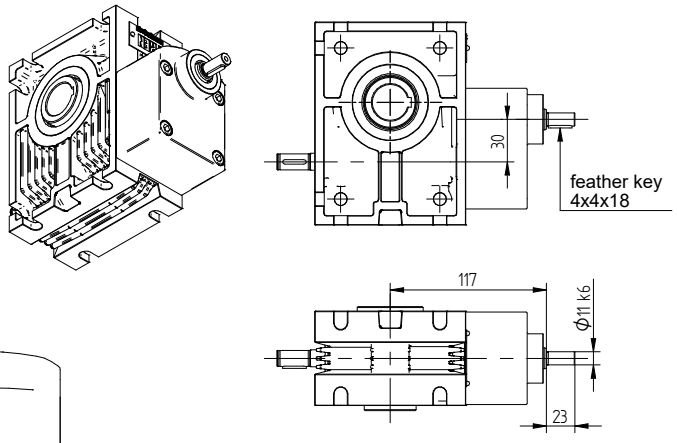

uniCe 040	A	B	C	D	E H7	F	G	H	I	J	K	L	LATDC	M	N	O	P	Q
63B14	74,5	8	12	90	60	3,5	40	71	75	6	9,11,14,19	192	276	130	114	11	23	3
71B14				105	70	3,5			85	7		214	300	145	119	14	30	3
56B5				120	80	4			100			178		120	102	9	20	3
80B14												243	340	175	130	19	40	3
		10	10	140	95	4			115	9								
				160	110	4,5			130									

Measurements uniCe 050 & uniTeCe 050

uniCe-050-**N**-00-W-QH
gear with axle drive shaft and output hollow shaft

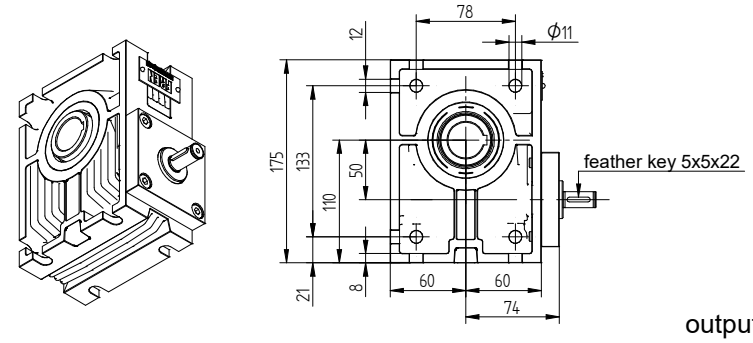

cut A-A

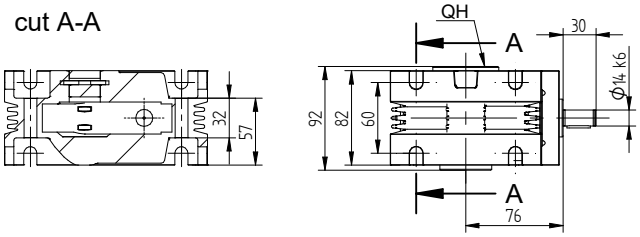

uniCe-050-**R**-00-W-QH
gear with axle drive shaft, output hollow shaft and adjustable slip coupling

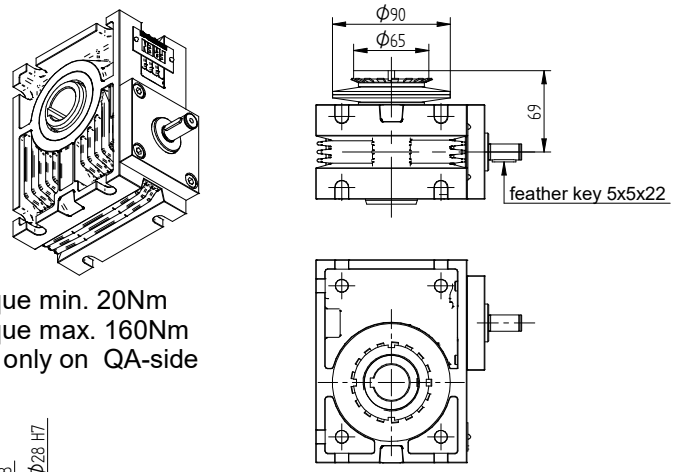

output torque min. 20Nm
output torque max. 160Nm
adjustable only on QA-side

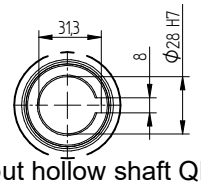

output hollow shaft QH

uniCe-050-N-00-W-**QAB**-00-**QC**
gear with two input and output shafts

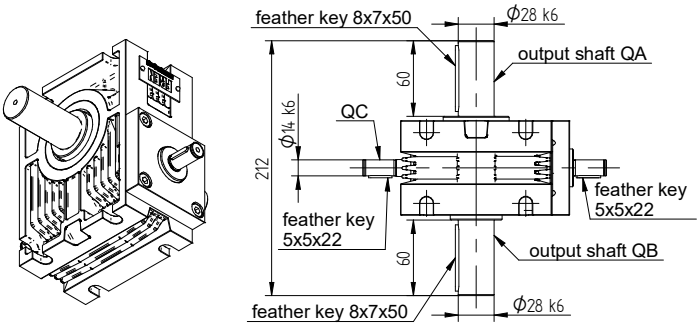

specify output shaft by order

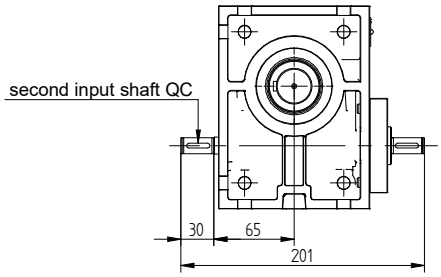

uniCe-050-N-00-W-**QB-FI**
gear with output shaft QB, output flange and axle drive shaft

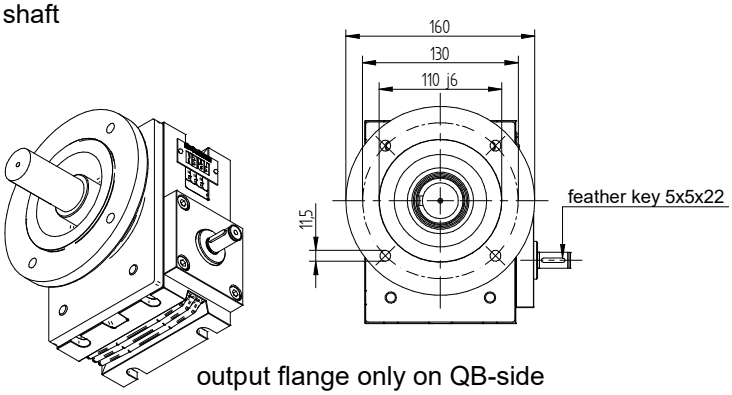

output flange only on QB-side
output shaft QH, QAB, QA and QB possible

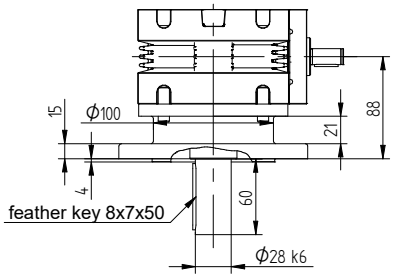

choice the gear according to the typ designation on page 4

uniCe-050-N-00-**JM/000/00**-QH

gear with input hollow shaft, output hollow shaft and flange

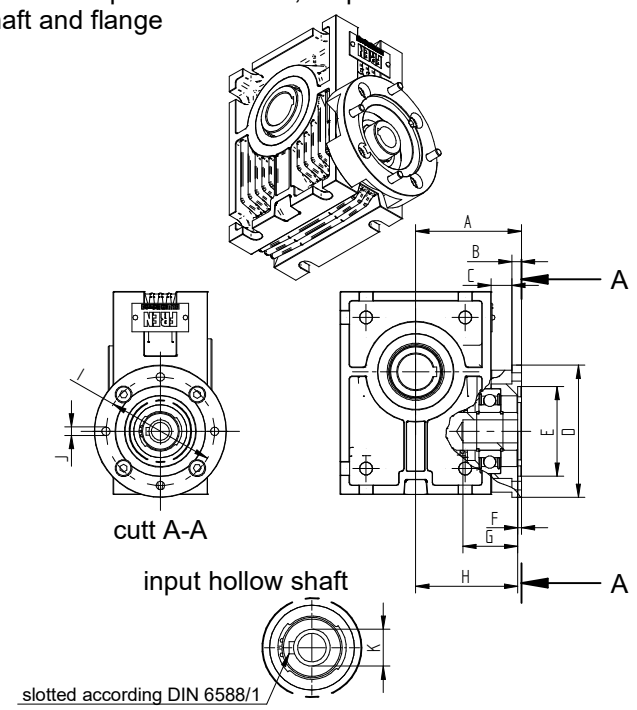

uniCe-050-N-00-**Motor**-QH

gear with output hollow shaft and motor

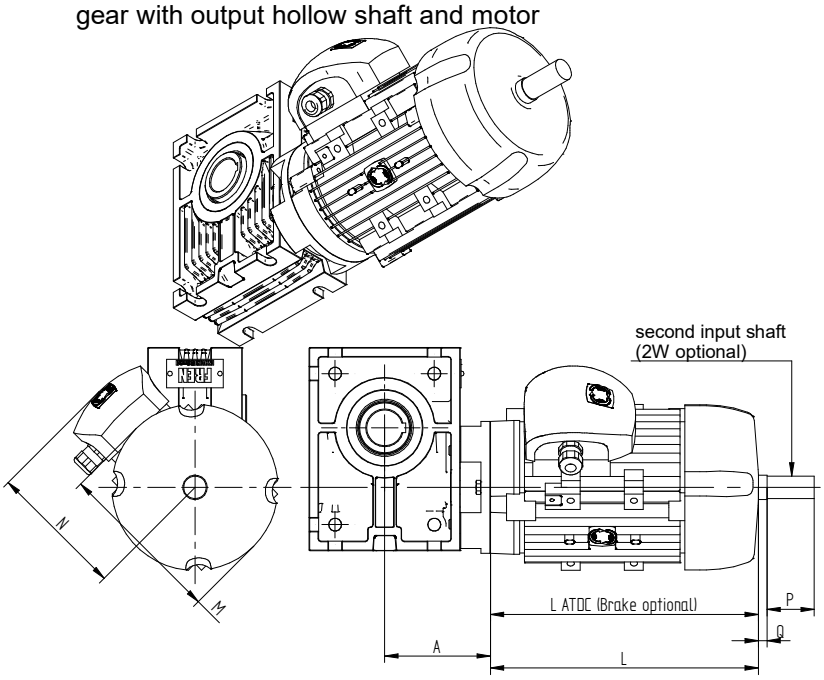

uni**Te**Ce-050-N-00-**Motor**-QH-00-**QC**

gear with pre-stage, output hollow shaft, second input shaft and motor

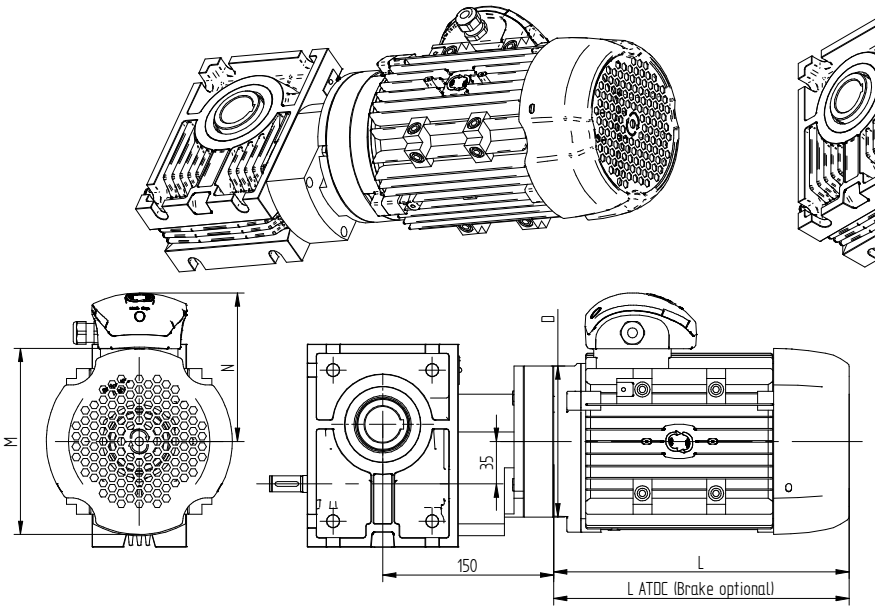

uni**Te**Ce-050-N-00-W-QH

gear with pre-stage, output hollow shaft, axle drive shaft and scond input shaft

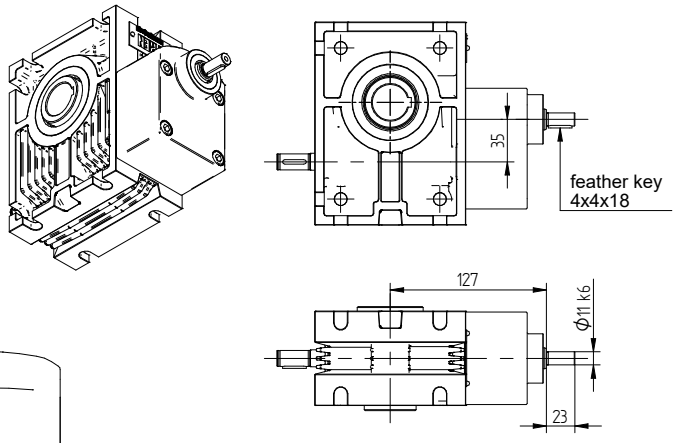

uniCe 050	A	B	C	D	E H7	F	G	H	I	J	K	L	LATDC	M	N	O	P	Q
80B14	88	8	20	120	80	4	50	86	100	7	11,14,19,24	243	340	175	130	19	40	3
63B5		10	18	140	95				115	9		192	276	130	114	11	23	3
90SB14												280	411	195	145	24	50	5
90LB14												308	436	195	145	24	50	5
71B5				160	110	4,5			130			214	300	145	119	14	30	3
		13	15	200	130				165	11								

Measurements uniCe 063 & uniTeCe 063

uniCe-063-**N**-00-W-QH
gear with axle drive shaft and output hollow shaft

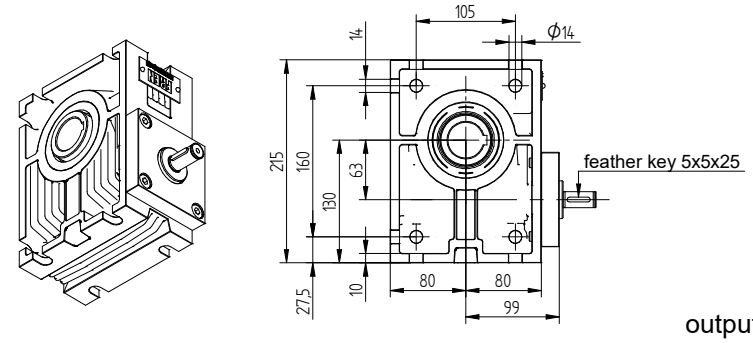

cut A-A

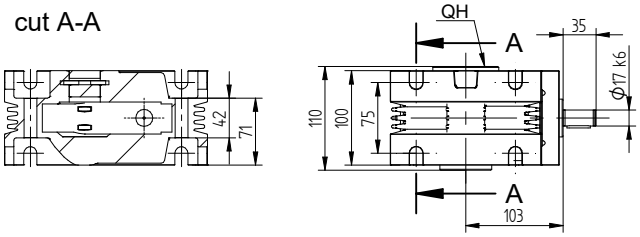

uniCe-063-**R**-00-W-QH
gear with axle drive shaft, output hollow shaft and adjustable slip coupling

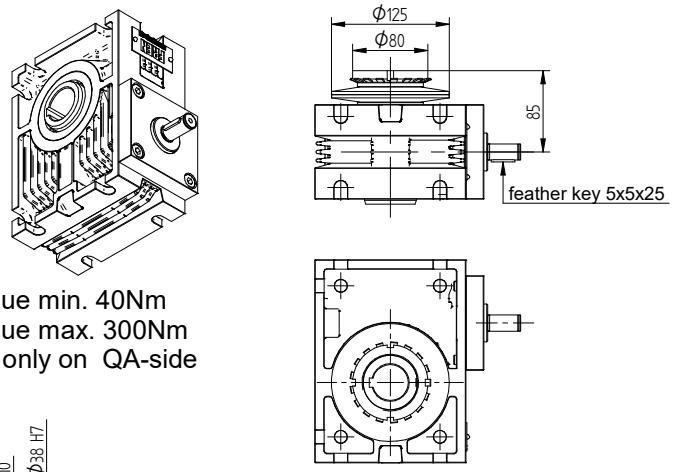

output torque min. 40Nm
output torque max. 300Nm
adjustable only on QA-side

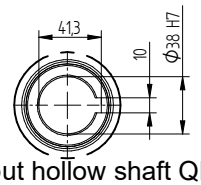

output hollow shaft QH

uniCe-063-N-00-W-**QAB**-00-**QC**
gear with two input and output shafts

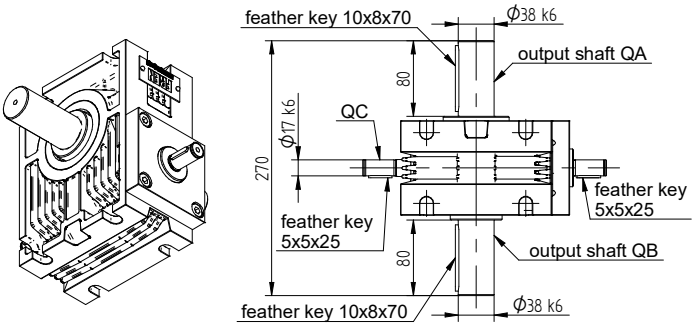

specify output shaft by order

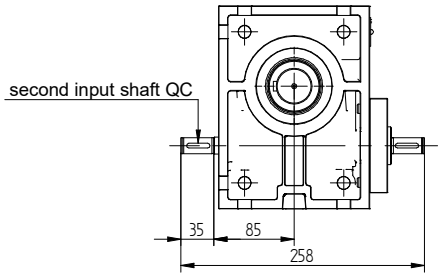

uniCe-063-N-00-W-**QB-FI**
gear with output shaft QB, output flange and axle drive shaft

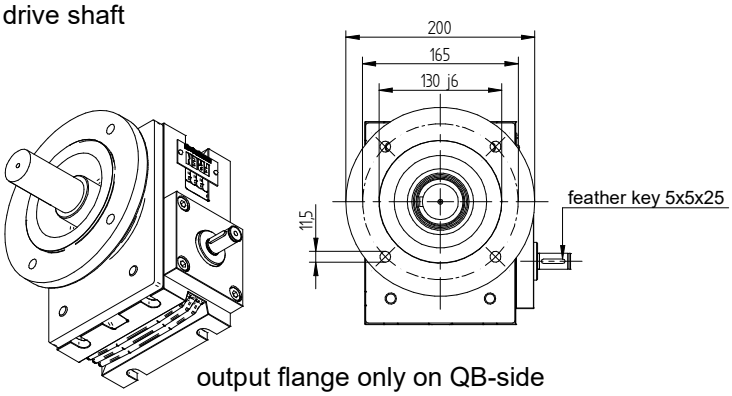

output flange only on QB-side
output shaft QH, QAB, QA and QB possible

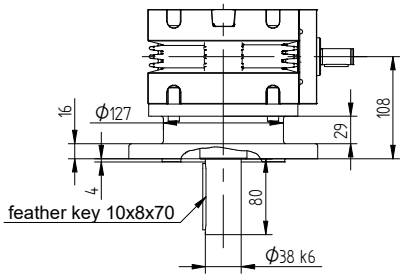

choice the gear according to the typ designation on page 4

uniCe-063-N-00-**JM/000/00**-QH

gear with input hollow shaft, output hollow shaft and flange

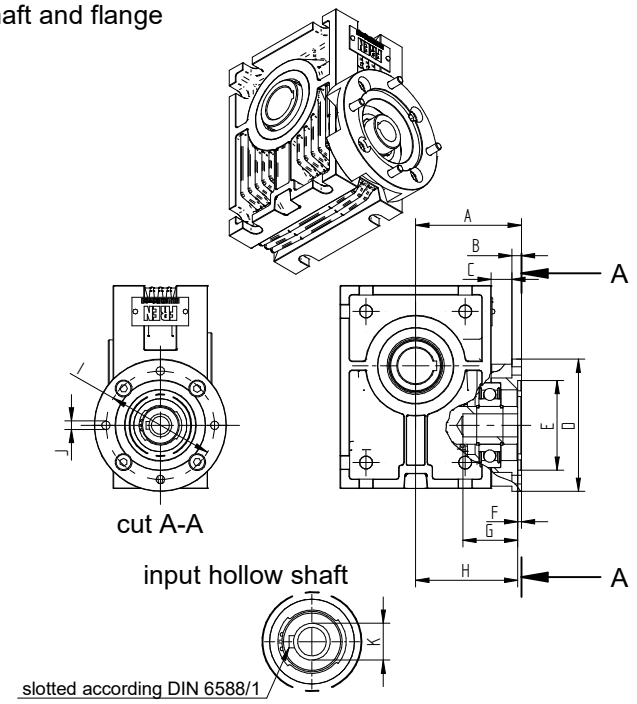

uniCe-063-N-00-**Motor**-QH

gear with output hollow shaft and motor

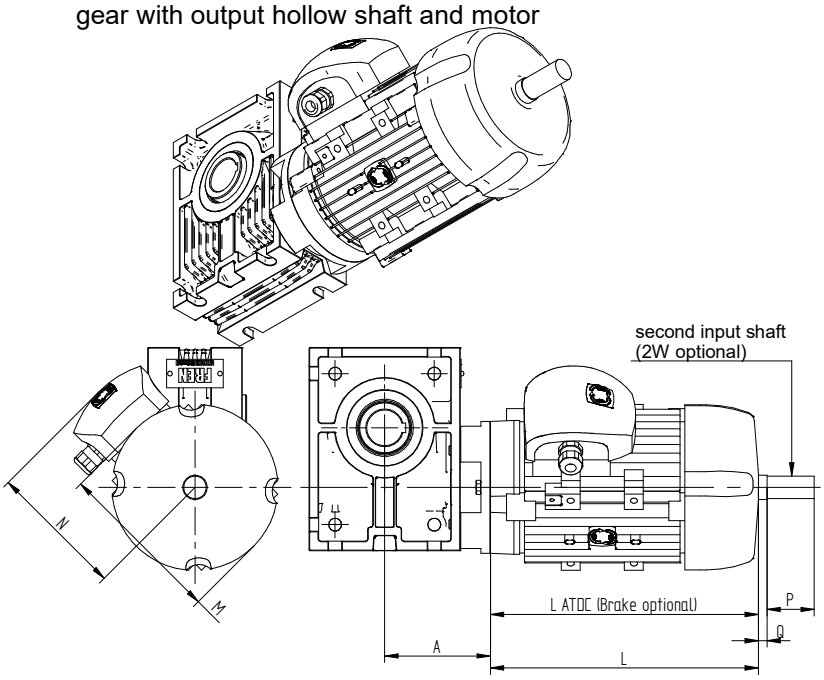

uni**Te**Ce-063-N-00-**Motor**-QH-00-**QC**

gear with pre-stage, output hollow shaft, second input shaft and motor

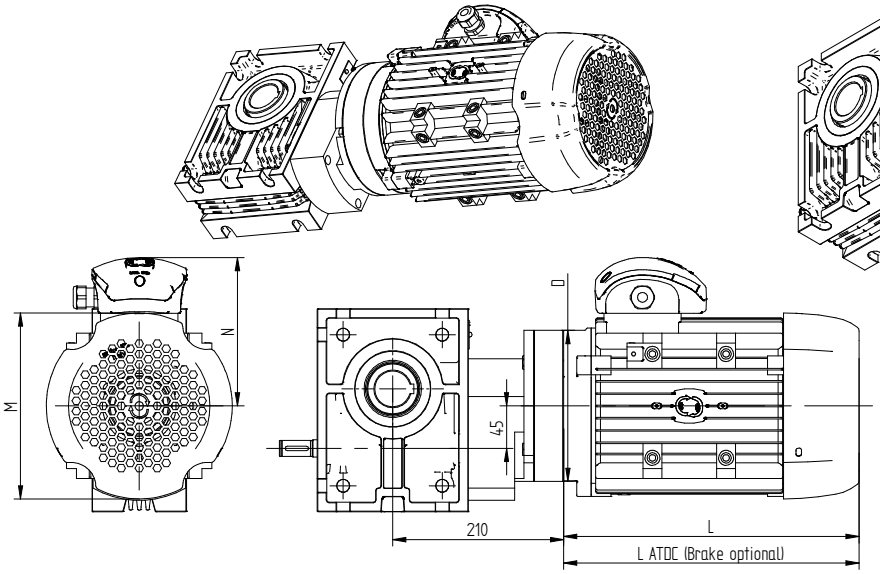

uni**Te**Ce-063-N-00-W-QH

gear with pre-stage, output hollow shaft, axle drive shaft and scond input shaft

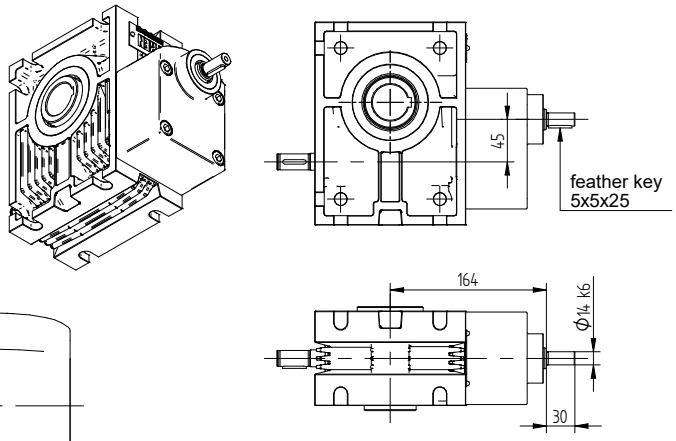

uniCe 063	A	B	C	D	E H7	F	G	H	I	J	K	L	LATDC	M	N	O	P	Q
90SB14	112	10	22	140	95	4	60	108	115	9	14,19,24,28	280	411	195	145	24	50	5
90LB14												308	436	195	145	24	50	5
71B5				160	110	4,5			130			214	300	145	119	14	30	3
100B14												333	474	215	170	28	60	5
112B14												350	505	240	177	28	60	5
80B5		16	16	200	130				165	11		243	340	175	130	19	40	3
		21	11	250	180	5			215	14								

Measurements uniCe 080

uniCe-080-**N**-00-W-QH
gear with axle drive shaft and output hollow shaft

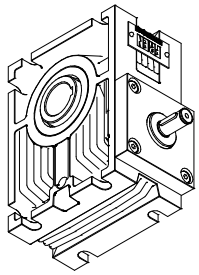

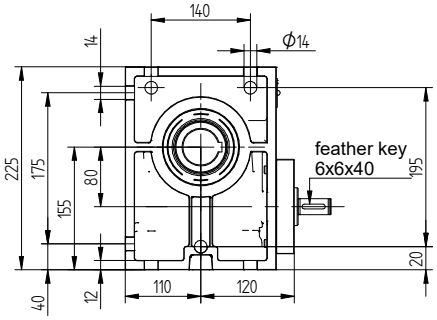

cut A-A

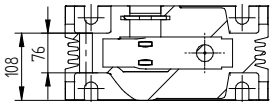

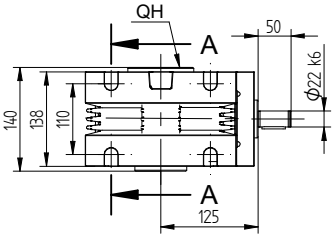

uniCe-080-**R**-00-W-QH
gear with axle drive shaft, output hollow shaft and adjustable slip coupling

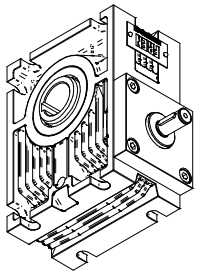

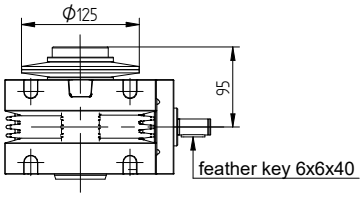

output torque min. 100Nm
output torque max. 500Nm
adjustable only on QA-side

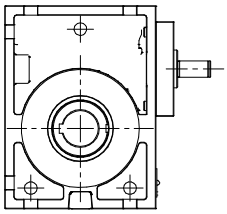

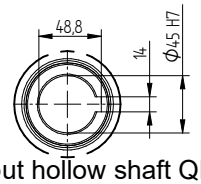

output hollow shaft QH

uniCe-080-N-00-W-**QAB**-00-**QC**
gear with two input and output shafts

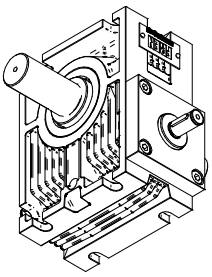

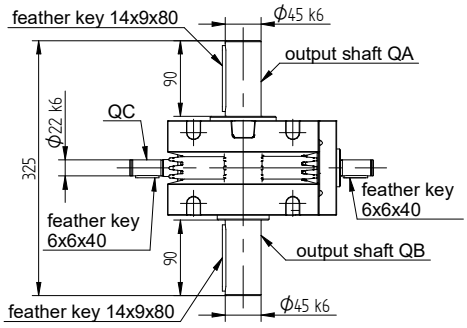

specify output shaft by order

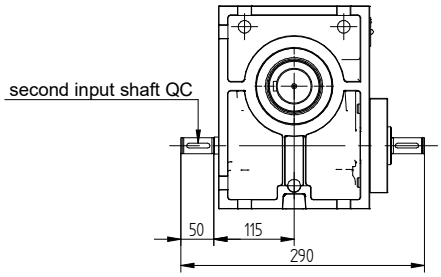

uniCe-080-N-00-W-**QB-FI**
gear with output shaft QB, output flange and axle drive shaft

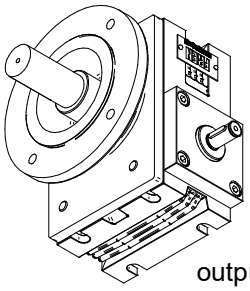

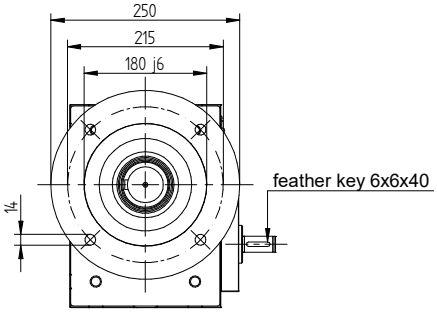

output flange only on QB-side
output shaft QH, QAB, QA and QB possible

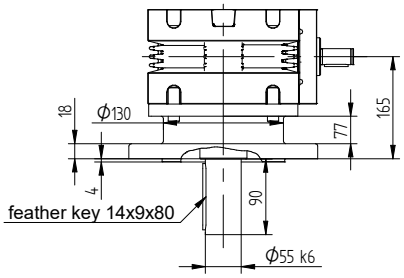

choice the gear according to the typ designation on page 4

uniCe-080-N-00-**JM/000/00**-QH

gear with input hollow shaft, output hollow shaft and flange

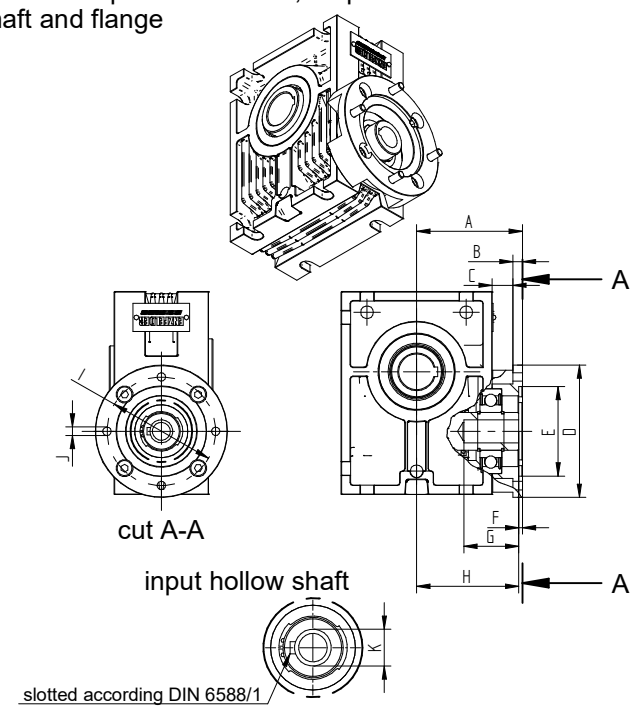

uniCe-080-N-00-**Motor**-QH

gear with output hollow shaft and motor

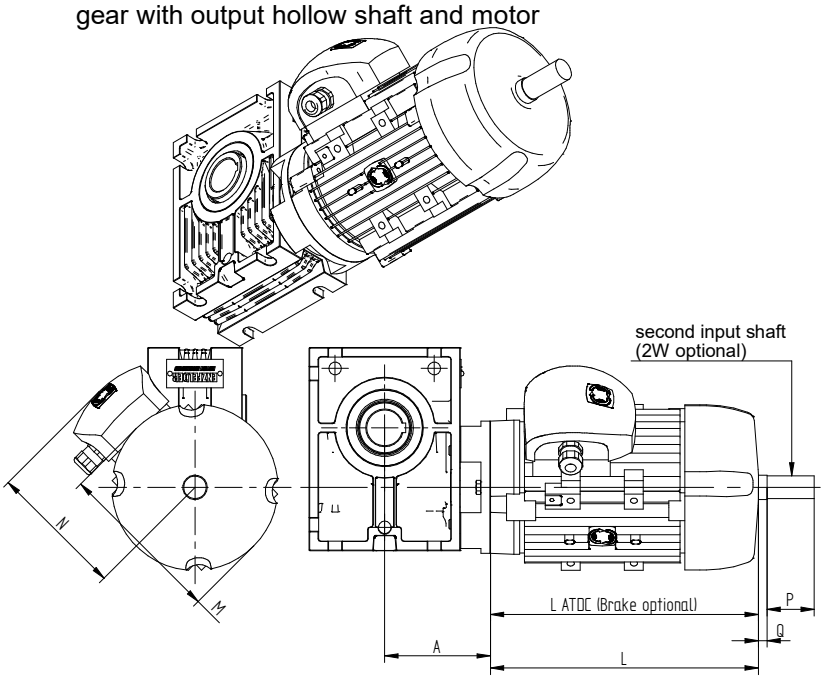

uniCe 080	A	B	C	D	E H7	F	G	H	I	J	K	L	LATDC	M	N	O	P	Q
	131			160	110				130									
80B5		13				4,5				M10		243	340	175	130	19	40	3
90SB5	120			200	130				165			280	411	195	145	24	50	5
90LB5							80	115			19,24,28,38	308	436	195	145	24	50	5
100B5		17		250	180				215			333	474	215	170	28	60	5
112B5	140					5				M12		350	505	240	177	28	60	5
132SB5				300	230				265			400	588	275	197	38	80	5
132MB5												436	621	275	197	38	80	5

Measurements uniCe 100

uniCe-100-**N**-00-W-QH
gear with axle drive shaft and output hollow shaft

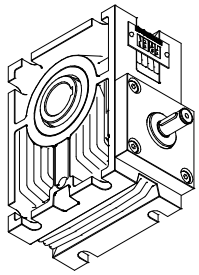

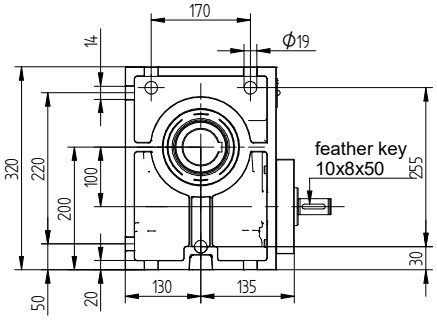

cut A-A

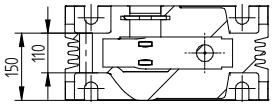

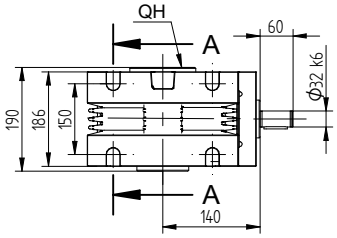

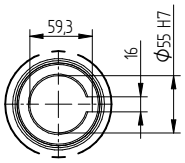

output hollow shaft QH

uniCe-100-**R**-00-W-QH
gear with axle drive shaft, output hollow shaft and adjustable slip coupling

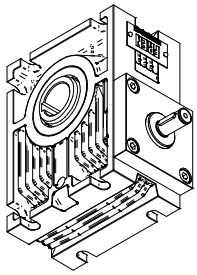

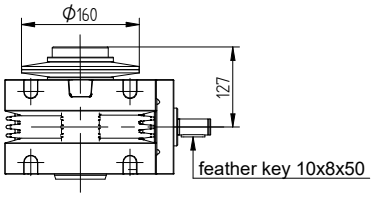

output torque min. 200Nm
output torque max. 800Nm
adjustable only on QA-side

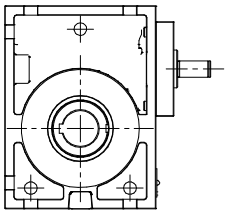

uniCe-100-N-00-W-**QAB**-00-**QC**
gear with two input and output shafts

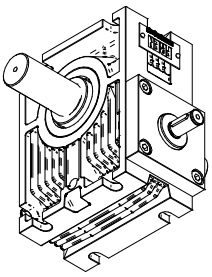

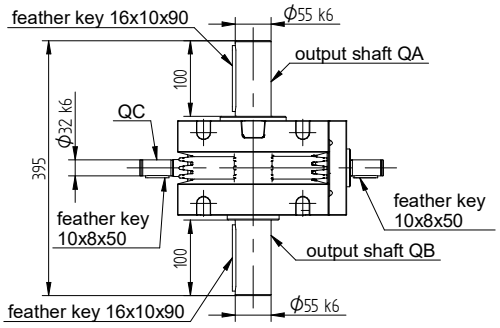

specify output shaft by order

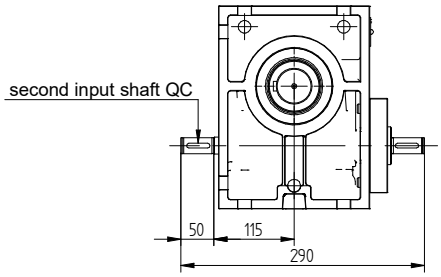

uniCe-100-N-00-W-**QB-FI**
gear with output shaft QB, output flange and axle drive shaft

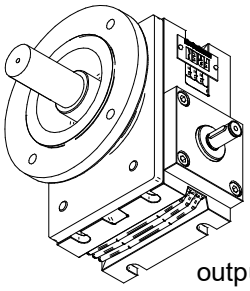

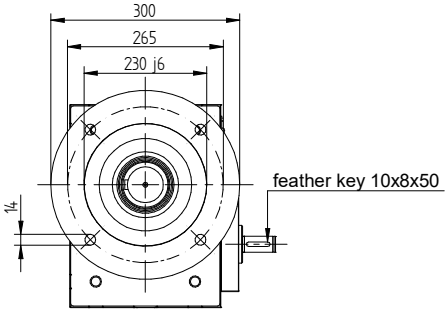

output flange only on QB-side
output shaft QH, QAB, QA and QB possible

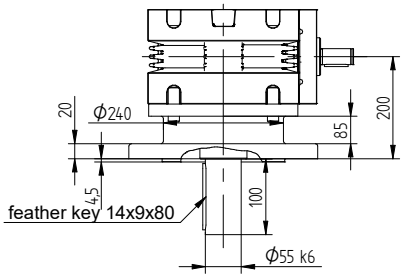

choice the gear according to the typ designation on page 4

uniCe-100-N-00-**JM/000/00**-QH

gear with input hollow shaft, output hollow shaft and flange

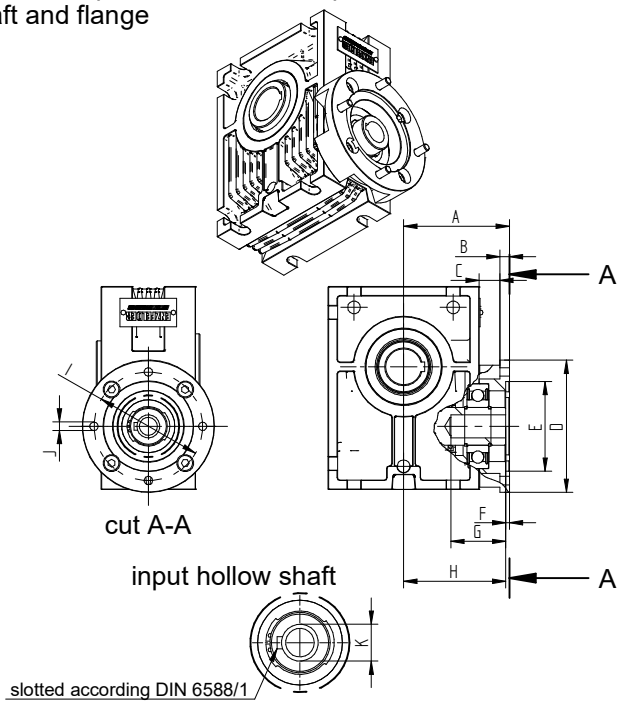

uniCe-100-N-00-**Motor**-QH

gear with output hollow shaft and motor

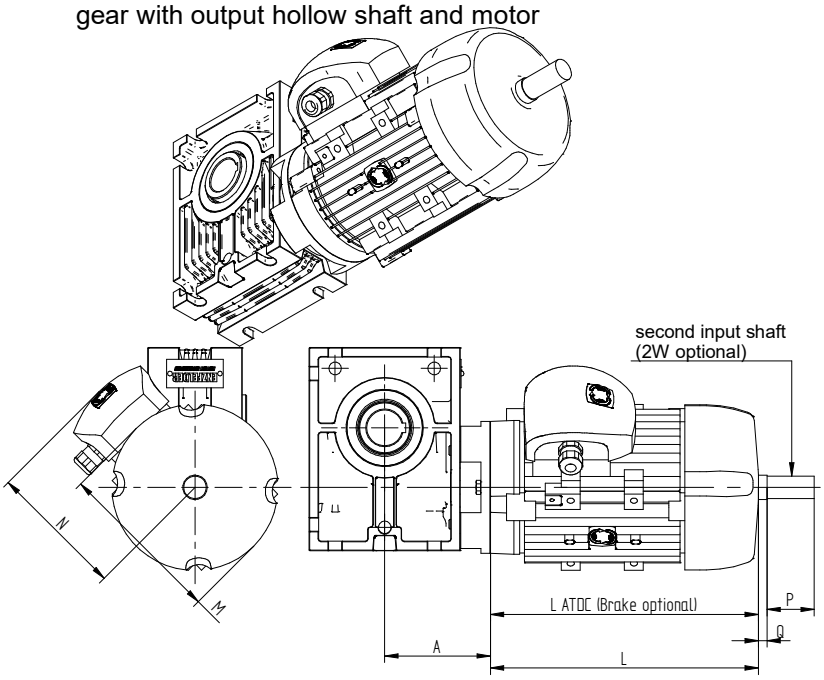

uniCe 100	A	B	C	D	E H7	F	G	H	I	J	K	L	LATDC	M	N	O	P	Q
90SB5	146	13		200	130	4,5			165	M10		280	411	195	145	24	50	5
90LB5												308	436	195	145	24	50	5
100B5	135	16		250	180				215			333	474	215	170	28	60	5
112B5						5	110	129		M12	24,28,38,42	350	505	240	177	28	60	5
132SB5	160	20		300	230				265			400	588	275	197	38	80	5
132MB5												436	621	275	197	38	80	5
160MB5	175	25		350	250	6			300	18		503	720	330	255	42	110	5
160LB5												598	771	330	255	42	110	5

Overhung load

On output-shaft in kN (in the middle of normal output shaft extension)

	T_2 uniCe 035		T_2 uniCe 040		T_2 uniCe 050		T_2 uniCe 063		T_2 uniCe 080		T_2 uniCe 100	
n_2	20	40	30	80	60	120	120	250	250	500	400	800
25	3,1	3,0	3,1	3,1	5,0	4,5	7,2	7,2	7,5	7,5	15,0	14,6
40	2,8	2,5	3,1	2,7	4,2	3,7	7,2	6,8	7,5	7,5	13,8	12,0
100	2,0	1,7	2,3	1,8	3,0	2,5	5,3	4,7	6,3	4,9	9,7	7,9
250	1,4	1,1	1,6	1,1	2,0	1,5	3,7	3,1	4,2	2,8	6,4	4,6

Efficiency

The efficiency given in the tables is applicable for the worm gear with torque take off which is reached with the mentioned motor power.

If you need a higher efficiency or self-locking, please contact us!

Self-locking

static self-locking (from the standstill):

exists when starting efficiency ηA ≤ 0,5

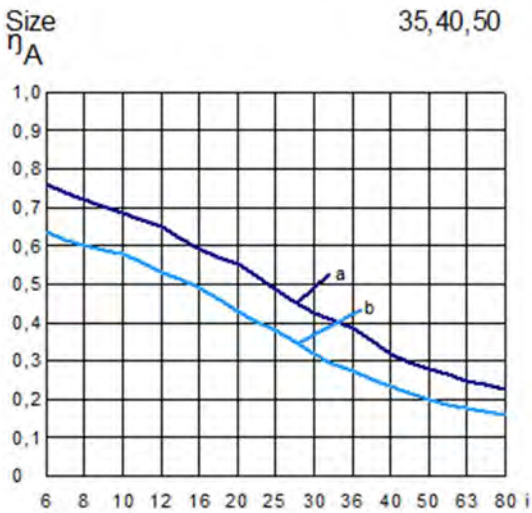

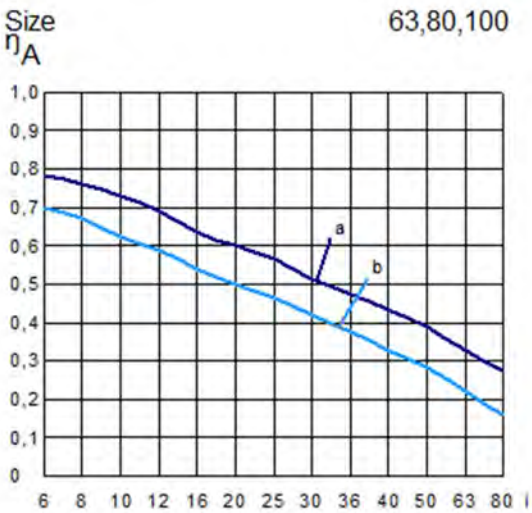

a;b .... borderlines

i .... ratio

dynamic self-locking (when running):

require an efficiency of running ηR ≤0,5

η ..... worm drives in motion

ηA ..... standstill

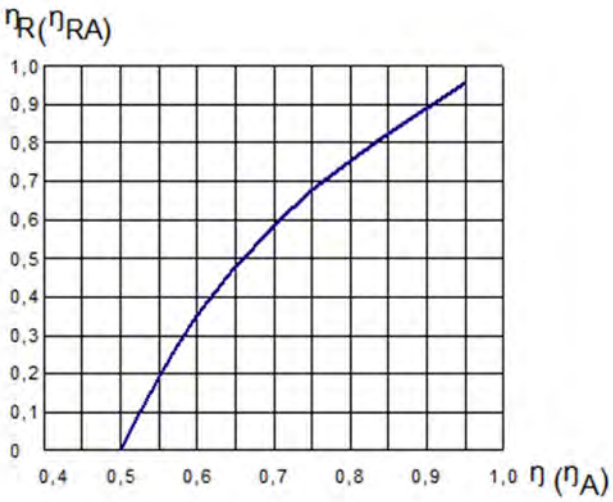

Slip coupling

The built-in slip coupling, which is running immersed in oil, is practically maintenance free.

It is designed as a friction coupling. The torque can be adjusted.

Created temperature is dissipated by the oil, when slipping continuously for more than 15 minutes, temperature increases to a max. 36°F (20°C).

Advantages

- exact calculation of the unit as well as the machine without excessive safety considerations
- protection against operator´s mistakes and accidents
- overload protection for the gearbox and the operating plant.
- reduction of peak loads during start-up, shutdown and operation.

A type of slip-coupling with limited adjustable torque, simply and economically constructed, is available to suit most requirements. Deliverable in most sizes.

Special versions

- worm left handed
- special ratio
- oil seals for high temperature
- special dimensions for input and output shafts
- stainless shafts
- special notox lubrication

Please sent an inquiry for special wishes.

Lubrication

Lubrication for life (synthetic lubricant) is included.

Size 035 – 063 lubricate with low-viscosity grease **Marson SY 00** from **Total**.

Size 080 – 100 lubricate with oil **Carter SY 220** from **Total**.

	uniCe 035	uniCe 040	uniCe 050	uniCe 063	uniCe 080	uniCe 100
amount [cm³]	40	50	125	250	880	1100

Maintenance

uniCe-worm-gears are practically maintenance free.

After 100 hours of running (later each 1000 hours) it is recommended to check for lack of lubrication.

Motor

The motors are built according to:

- multiple voltage 230/400V or 400/690V
- multi-frequency 50/60Hz
- class insulation F
- continuous duty service S1
- protection IP55
- efficiency class IE2
- tropicalized winding
- painting RAL 9006
- flange according IEC see page 8

optional is:

- a second shaft = 2W
- a brake with hand lever = ATDC
- inner thermal overload cut-out switches
  - bimetallic device = PTO
  - thermistor device = PTC

kW	type	braking torque [Nm]	braking time no load [sek]	brake power [W]	Kg
0,18	ATDC 63A-2	4,5	0,15	22	7,8
0,25	ATDC 63B-2	4,5	0,15	22	8,1
0,37	ATDC 71A-2	8,0	0,15	28	9,0
0,55	ATDC 71B-2	8,0	0,15	28	9,5
0,75	ATDC 80A-2	12,5	0,20	30	12,7
1,10	ATDC 80B-2	12,5	0,20	30	13,5
1,50	ATDC 90S-2	25,0	0,25	45	16,3
2,20	ATDC 90L-2	25,0	0,25	45	18,0
3,00	ATDC 100L-2	38,0	0,30	60	27,0
4,00	ATDC 112M-2	70,0	0,35	65	37,0
5,50	ATDC 132SA-2	140,0	0,40	88	49,1
7,50	ATDC 132SB-2	140,0	0,40	88	54,5
11,00	ATDC 160MA-2	210,0	0,50	110	130,0
15,00	ATDC 160MB-2	210,0	0,50	110	140,0
18,50	ATDC 160L-2	210,0	0,50	110	155,0

kW	type	braking torque [Nm]	braking time no load [sek]	brake power [W]	Kg
0,12	ATDC 63A-4	4,5	0,15	22	7,8
0,18	ATDC 63B-4	4,5	0,15	22	8,1
0,25	ATDC 71A-4	8,0	0,15	28	9,0
0,37	ATDC 71B-4	8,0	0,15	28	9,5
0,75	ATDC 80B-4	12,5	0,20	30	14,8
1,10	ATDC 90S-4	25,0	0,25	45	16,5
1,50	ATDC 90L-4	25,0	0,25	45	18,3
2,20	ATDC 100LA-4	38,0	0,30	60	26,8
3,00	ATDC 100LB-4	38,0	0,30	60	29,5
4,00	ATDC 112M-4	70,0	0,35	65	37,5
5,50	ATDC 132S-4	140,0	0,40	88	51,5
7,50	ATDC 132M-4	140,0	0,40	88	57,5
11,00	ATDC 160M-4	210,0	0,50	110	138,0
15,00	ATDC 160L-4	210,0	0,50	110	152,0

Motor-power table:

2 poles motor

kW	type	rpm	In[A]	Is/In	Cn[Nm]	Cs/Cn	η %	cosφ	J Kgm²	IE-class	Kg
0,13	56B-2	2635	0,36	3,0	0,47	2,0	65,5	0,806	0,00023	IE3	3,5
0,18	63A-2	2808	0,47	4,3	0,61	2,6	71,8	0,766	0,00031	IE3	4,3
0,25	63B-2	2780	0,63	4,5	0,86	2,7	74,6	0,770	0,00060	IE3	4,4
0,37	63C-2	2791	0,93	4,5	1,27	2,8	76,4	0,755	0,00075	IE3	4,9
0,37	71A-2	2820	0,94	4,6	1,25	2,3	74,0	0,770	0,00080	IE3	5,7
0,55	71B-2	2844	1,27	5,5	1,85	3,0	82,1	0,760	0,00090	IE3	6,9
0,75	80A-2	2892	1,74	6,8	2,48	3,5	80,9	0,770	0,00158	IE3	17,0
1,1	80B-2	2885	2,26	7,4	3,64	3,0	84,5	0,830	0,00185	IE3	18,0
1,5	90S-2	2902	3,26	7,7	4,93	3,9	85,3	0,786	0,00383	IE3	23,0
2,2	90L-2	2918	5,02	7,7	7,35	4,2	86,2	0,730	0,00726	IE3	26,0
3	100L-2	2903	6,09	7,9	9,87	3,6	87,1	0,812	0,01439	IE3	35,0
4	112M-2	2943	7,56	9,8	12,97	3,5	89,6	0,856	0,01663	IE3	43,0
5,5	132SA-2	2940	10,14	7,0	17,87	2,1	91,0	0,860	0,03300	IE3	44,8
7,5	132SB-2	2925	13,35	7,1	24,49	2,2	91,6	0,885	0,03960	IE3	73,0
11	160MA-2	2937	19,72	6,2	35,77	2,1	91,4	0,881	0,04976	IE3	120,0
15	160MB-2	2938	26,29	5,7	48,76	2,0	92,0	0,895	0,06587	IE3	132,0
18,5	160L-2	2942	32,15	6,0	60,05	2,1	93,0	0,893	0,07260	IE3	150,0

4 poles motor

kW	type	rpm	In[A]	Is/In	Cn[Nm]	Cs/Cn	η %	cosφ	J Kgm²	IE-class	Kg
0,13	63A-4	1355	0,4	3,2	0,92	2,3	64,7	0,720	0,00050	IE2	4,3
0,18	63B-4	1393	0,56	3,6	1,23	2,4	68,2	0,680	0,00060	IE2	4,8
0,25	63C-4	1380	0,72	3,3	1,73	2,4	71,0	0,702	0,00075	IE2	5,4
0,25	71A-4	1400	0,69	4,2	1,71	2,5	72,7	0,720	0,00080	IE2	5,8
0,37	71B-4	1366	1,01	3,7	2,59	2,3	73,2	0,720	0,00130	IE2	6,3
0,55	71C-4	1386	1,41	4,4	3,79	2,4	77,2	0,727	0,00170	IE2	7,6
0,55	80A-4	1422	1,65	3,6	3,73	2,2	77,1	0,627	0,00180	IE2	10,0
0,75	80B-4	1426	1,87	6,0	5,01	3,1	83,1	0,690	0,00277	IE3	12,0
1,1	80C-4	1390	2,85	3,9	7,56	2,5	81,5	0,684	0,00248	IE2	11,8
1,1	90S-4	1436	2,61	6,4	7,36	3,3	84,8	0,723	0,00304	IE3	25,0
1,5	90L-4	1427	3,59	6,8	10,03	4,1	85,3	0,708	0,00356	IE3	30,0
2,2	100LA-4	1438	4,77	7,1	14,74	3,5	86,7	0,771	0,00713	IE3	36,0
3	100LB-4	1447	6,48	7,6	19,76	3,5	89,0	0,745	0,00893	IE3	40,0
4	112M-4	1460	8,79	7,1	26,17	3,2	89,1	0,736	0,01663	IE3	43,0
5,5	132S-4	1454	10,64	6,4	36,12	2,1	89,9	0,830	0,02853	IE3	70,0
7,5	132MA-4	1460	14,39	6,6	49,06	1,9	90,5	0,831	0,03946	IE3	56,5
11	160M-4	1468	20,76	5,8	71,56	1,7	91,8	0,833	0,08133	IE3	125,0
15	160L-4	1460	28,19	5,0	98,12	1,7	92,3	0,832	0,12239	IE3	150,0

Screw jacks

SG
Screw jack
classic

HSG
High performance
screw jack

BG
Screw jack
cubic

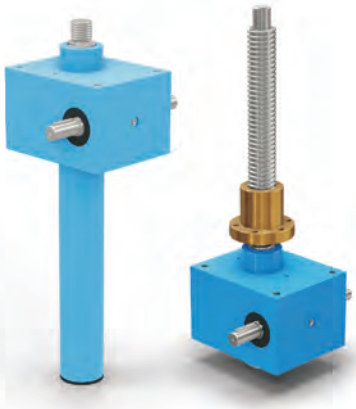

SH
Servo lifting gear

SHG
High speed
screw jack

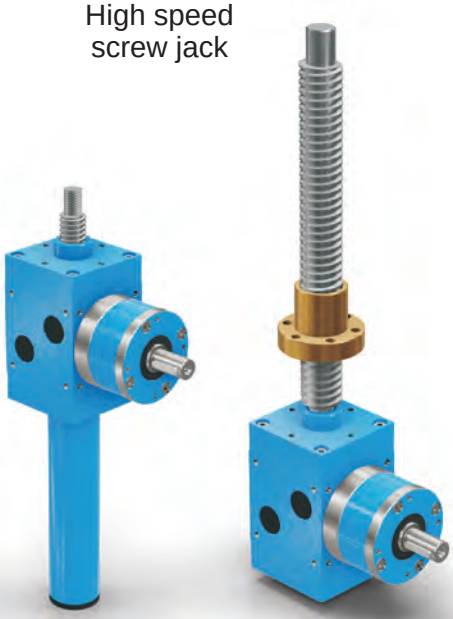

SLA
Spindlebearing

Gearbox

K
Bevel gear Box
type K

H
Bevel gear Box
type H

Telescopicspindle-screw jacks

TSGLR
Telescopicspindle-
screw jack
2 stage

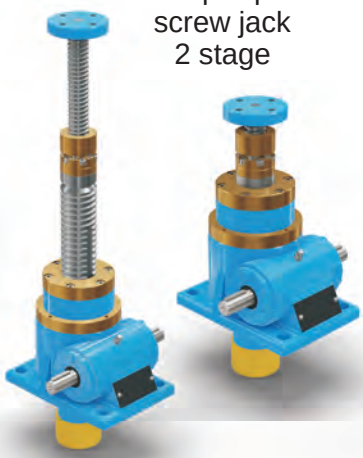

TSG
Telescopicspindle-
screw jack
2-5 stage

Electric cylinder

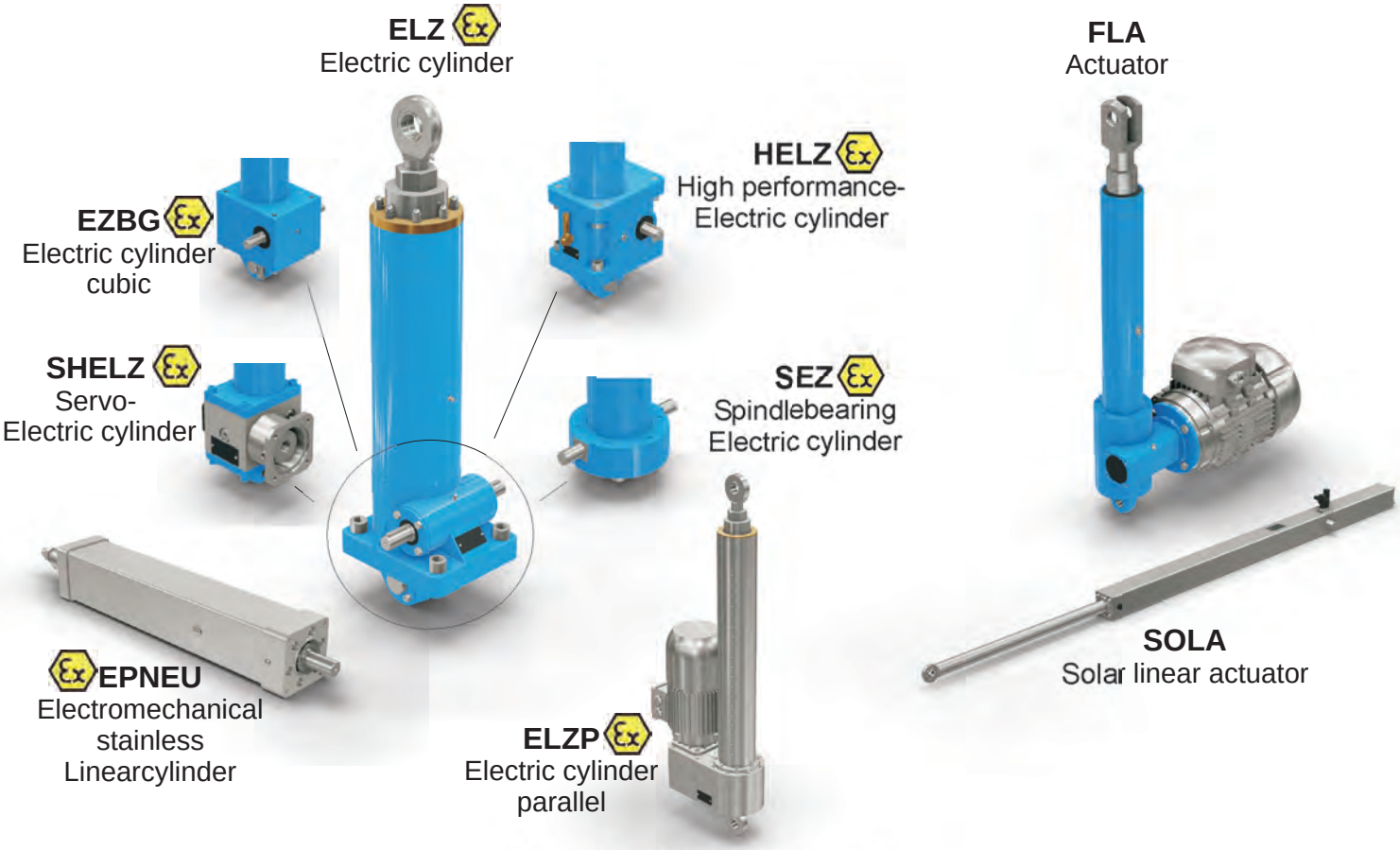

Connecting elements
Coupling

R / GS
Elastic / Backlash-free
Coupling

GEL
Centa coupling

RT
Slip hub

RK
Slip coupling

RKK
Slip claw coupling

Connecting shaft

ZR
Connecting shaft

FZWA
Connecting shaft

G / GX
Elastic
Connecting shaft

KGE
Cardan shaft

ENZFELDER
MOTION FOR SUCCESS

SERVICES

- Technical Consulting & Support
- Customized Solutions
- Engineering
- Training & Commissioning
- Maintenance & Repair
- Prompt Spare Parts Delivery

INDUSTRIES

- Industry & Automation
- Transport & Logistics
- Aircraft- & Aerospace
- Railway Equipment Technology
- Lifting & Maintenance
- Handling Systems
- Food Industry
- Medicine Technology
- Theather Applications & Stage Engeneering
- Water Regulation & Ship Building
- Hydraulic Engineering & Flood Protection
- Steel Plant Engineering
- Energy & Environmental Technology

Media owner
Enzfelder GmbH
Eichengasse 36
A-2551 Enzesfeld

Tel.: +43-2256-81287-0
Mail: office@enzfelder.at

CONFORMANCE VERIFICATION INTERNATIONAL
CVI
CERTIFIED MANAGEMENT SYSTEM
ISO 9001

Enzfelder uses 100 % green elecricity from oekostrom AG.
oekostrom AG

concept, text, design & editors
Enzfelder GmbH

photo credit
www.shutterstock.com

Print
www.druck.at